Circuits

Collection Editor:
Megan Pee

Circuits

Collection Editor:
Megan Pee

Authors:
Don Johnson
Rudy Lopes
Darryl Morrell
Janell Rodriguez

Online:
< http://cnx.org/content/col10589/1.1/ >

C O N N E X I O N S

Rice University, Houston, Texas

This selection and arrangement of content as a collection is copyrighted by Megan Pee. It is licensed under the Creative Commons Attribution 2.0 license (http://creativecommons.org/licenses/by/2.0/).
Collection structure revised: October 12, 2008
PDF generated: May 15, 2013
For copyright and attribution information for the modules contained in this collection, see p. 31.

Table of Contents

1 Lesson 1
2 Two Light Bulbs and A Battery: an Elementary Circuits Activity (Instructor Information) 3
3 Two Light Bulbs and A Battery: an Elementary Circuits Activity 5
4 Electric Circuits and Interconnection Laws 9
5 Lesson 2
5.1 Series and Parallel Circuits 15
5.2 Creating Circuits in Multisim 20
5.3 Electricity in Simple, Series, and Parallel Circuits 23
5.4 Lesson 3 23
Solutions 28
Bibliography 29
Index 30
Attributions 31

Chapter 1

Lesson 1

Chapter 2

Two Light Bulbs and A Battery: an Elementary Circuits Activity (Instructor Information)[1]

NOTE: This module provides instructor information for the Two Light Bulbs and A Battery: an Elementary Circuits Activity module (Chapter 3).

2.1 Activity Objectives

- Students can create a simple electrical circuit.
- Students can relate the schematic representation of the circuit to the real circuit.
- Students can measure voltage.
- Students recognize that series and parallel connections are different.
- Address several common potential student misunderstandings:
  - Complete circuit
  - Light bulb contacts
  - Direct route
  - Resistive superposition

2.2 Background Information

Engelhardt and Beichner[1] have identified several common misconceptions that students may have when working with beginning electrical circuits concepts. These misconceptions include the following:

- Battery superposition: 2 batteries cause a bulb to shine twice as bright as one battery regardless of arrangement.
- Battery as a constant current source: battery supplies same amount of current to each circuit regardless of the circuit's arrangement
- Complete circuit: unable to identify a complete circuit—closed loop
- Light bulb contacts: unable to identify the two contacts on the light bulb
- Current consumed: current value decreases as you move through circuit elements until you return to the battery where there is no more current left.

[1] This content is available online at <http://cnx.org/content/m14369/1.2/>.

- Direct route: battery is the only source of charge so only those elements with a direct contact to the battery will light.
- Local: Current splits evenly at every junction regardless of the resistance of each branch.
- Resistive superposition: 2 resistors reduce the current by 2 relative to one resistor regardless of the resistors' arrangement.
- Rule application error: misapplied a rule governing circuits; for example, used the equation for resistors in series when the circuit showed resistors in parallel
- Sequential: only changes before an element will affect that element
- I/R Term confusion: resistance viewed as being caused by the current; a resistor resists the current so a current must flow for there to be any resistance.
- I/V Term confusion: voltage viewed as a property of current; current is the cause of the voltage; voltage and current always occur together.
- Topology: all resistors lined up geometrically in series are in series whether there is a junction or not. All resistors lined up geometrically in parallel are in parallel even if a battery is contained within a branch.

2.3 Description of Activity

Students work in teams. Each team receives a multimeter, two flashlight bulbs, a battery, and six pieces of wire. For the first part of the activity, each team is instructed to light the bulb using the battery and wire. This is followed by class instruction on measuring voltage using the multimeter. The teams work then to create circuits with two light bulbs.

Chapter 3

Two Light Bulbs and A Battery: an Elementary Circuits Activity[1]

NOTE: Development of this material was supported by the Arizona Board of Regents' Learner Centered Education Grant Program, Grant #11BU06.

NOTE: Instructor information for this module is available here (Chapter 2).

3.1 Introduction

The objective of this problem based learning activity is to create several simple electrical circuits with light bulbs and a battery. The purpose of the activity is to introduce you to several fundamental concepts in electrical circuits and identify and correct some potential misconceptions that you may have about electrical circuits.

3.2 Lighting One Bulb

Suppose you are driving late at night along a dark road and your car suddenly stops. Hoping to figure out what is wrong with the engine, you grab your flashlight and step out of the car, but accidentally drop the flashlight on the the pavement where it breaks into several pieces. You retrieve a battery and a light bulb from the black top. You have a few wires in the glove box leftover from your attempt to install a stereo. Can you use the battery, light bulbs, and wires to create enough light to check your engine?

3.2.1 Preliminary Reading

Before beginning the activity, read this description of a light bulb[2] . Pay particular attention to the figure of the light bulb-how is the filament connected to the two contacts?

3.2.2 Additional Reading Resources

The following resources give additional information about circuits, and you may find them useful and interesting either before or after the problem based learning activity.

- The concepts of voltage and current[3]

[1] This content is available online at <http://cnx.org/content/m14370/1.1/>.
[2] http://home.howstuffworks.com/light-bulb.htm
[3] "Voltage, Current, and Generic Circuit Elements" <http://cnx.org/content/m0011/latest/>

- Brief definitions and descriptions of voltage and current[4]
- Extended definitions and descriptions of voltage, current, and resistance[5]
- Basic ideas and definitions associated with circuits[6]
- Information about using multimeters is here[7] and here[8] .

3.2.3 Preliminary Questions

Before beginning the activity, answer the following questions:

1. On Figure 3.1, mark the path that electricity takes through the light bulb.
2. Sketch how you could connect a wire, battery, and bulb to light the bulb.

Discuss your answers with your team.

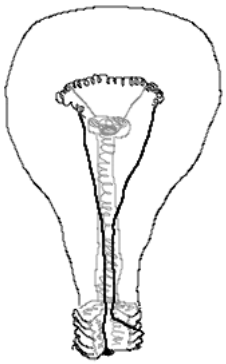

Figure 3.1: Cutaway drawing of a lightbulb.

3.2.4 Activity

Working in your team, connect the battery and light bulb using wires so that the light bulb is lit. Once you create a working circuit, try disconnecting each wire in your circuit (and then reconnecting it); what happens?

3.2.5 Post-Activity Questions

1. Sketch your working circuit-how is it different from your initial sketch? Why is it different?
2. What path does electricity take through the light bulb?
3. What path does electricity take through your working circuit?
4. An electrical schematic is a symbolic representation of a circuit. Figure 3.2 shows schematic symbols for a battery and a light bulb; lines between the symbols represent wires. Drawn a schematic that represents your working circuit.

[4] http://en.wikibooks.org/wiki/Circuit_Theory/Variables_and_Units
[5] http://www.lightandmatter.com/html_books/4em/ch03/ch03.html
[6] http://en.wikibooks.org/wiki/Circuit_Theory/Circuit_Basics
[7] http://en.wikipedia.org/wiki/Multimeter
[8] http://www.doctronics.co.uk/meter.htm

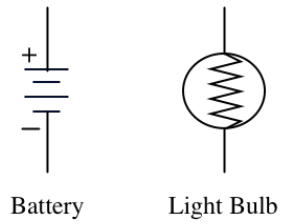

Figure 3.2: Schematic symbols for a battery and a light bulb.

3.3 Lighting Two Bulbs

After you successfully light up the bulb, you discover that it is too small to illuminate the engine compartment. You remember that your flashlight had a spare bulb; you eventually locate it and try to create a circuit that generates twice as much light.

3.3.1 Preliminary Question

Before beginning this portion of the activity, complete the following preliminary question:

1. Sketch how you will connect wires, the battery, and both bulbs so they both light and provide more light than a single bulb.

Discuss your sketch with your team.

3.3.2 Activity

Working in your team, find two different configurations in which the battery, wires, and lights are connected so that both bulbs light. For each configuration,

- Draw a schematic diagram.
- Note the brightness of both light bulbs.
- Measure and record the voltage across the battery terminals.
- Measure and record the voltage across the two lightbulbs.

3.3.3 Post-Activity Questions

1. Which configuration provides the larger amount of light? Can you relate this to the voltage across the light bulbs?

Chapter 4

Electric Circuits and Interconnection Laws[1]

A **circuit** connects circuit elements together in a specific configuration designed to transform the source signal (originating from a voltage or current source) into another signal—the output—that corresponds to the current or voltage defined for a particular circuit element. A simple resistive circuit is shown in Figure 4.1. This circuit is the electrical embodiment of a system having its input provided by a source system producing $v_{\text{in}}(t)$.

[1] This content is available online at <http://cnx.org/content/m0014/2.30/>.

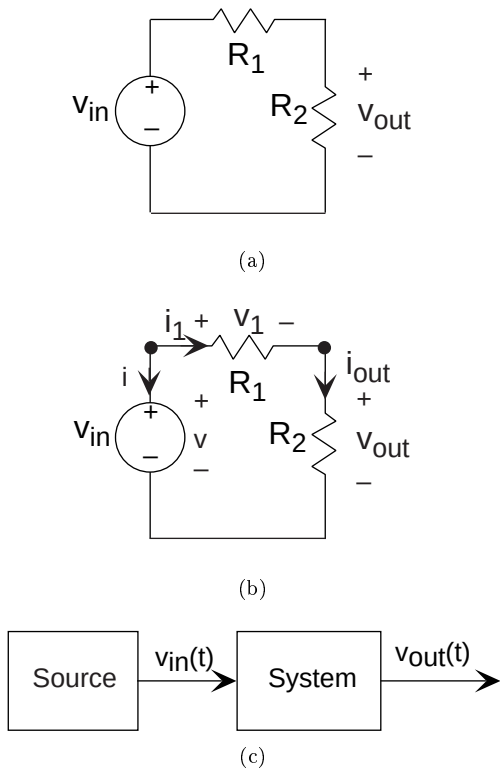

Figure 4.1: The circuit shown in the top two figures is perhaps the simplest circuit that performs a signal processing function. On the bottom is the block diagram that corresponds to the circuit. The input is provided by the voltage source v_{in} and the output is the voltage v_{out} across the resistor label R_2. As shown in the middle, we **analyze** the circuit—understand what it accomplishes—by defining currents and voltages for all circuit elements, and then solving the circuit and element equations.

To understand what this circuit accomplishes, we want to determine the voltage across the resistor labeled by its value R_2. Recasting this problem mathematically, we need to solve some set of equations so that we relate the output voltage v_{out} to the source voltage. It would be simple—a little too simple at this point—if we could instantly write down the one equation that relates these two voltages. Until we have more knowledge about how circuits work, we must write a set of equations that allow us to find **all** the voltages and currents that can be defined for every circuit element. Because we have a three-element circuit, we have a total of six voltages and currents that must be either specified or determined. You can define the directions for positive current flow and positive voltage drop **any way you like**. Once the values for the voltages and currents are calculated, they may be positive or negative according to your definition. When two people define variables according to their individual preferences, the signs of their variables may not agree, but current flow and voltage drop values for each element will agree. Do recall in defining your voltage and current variables[2] that the **v-i** relations for the elements presume that positive current flow is in the same direction as positive voltage drop. Once you define voltages and currents, we need six nonredundant equations to solve for the six unknown voltages and currents. By specifying the source, we have one; this amounts to providing the source's **v-i** relation. The **v-i** relations for the resistors give us two more. We are only halfway there; where

[2] "Ideal Circuit Elements" <http://cnx.org/content/m0012/latest/>

do we get the other three equations we need?

What we need to solve every circuit problem are mathematical statements that express how the circuit elements are interconnected. Said another way, we need the laws that govern the electrical connection of circuit elements. First of all, the places where circuit elements attach to each other are called **nodes**. Two nodes are explicitly indicated in Figure 4.1; a third is at the bottom where the voltage source and resistor R_2 are connected. Electrical engineers tend to draw circuit diagrams—schematics— in a rectilinear fashion. Thus the long line connecting the bottom of the voltage source with the bottom of the resistor is intended to make the diagram look pretty. This line simply means that the two elements are connected together. **Kirchhoff's Laws**, one for voltage (Section 4.2: Kirchhoff's Voltage Law (KVL)) and one for current (Section 4.1: Kirchhoff's Current Law), determine what a connection among circuit elements means. These laws are essential to analyzing this and any circuit. They are named for Gustav Kirchhoff[3] , a nineteenth century German physicist.

4.1 Kirchhoff's Current Law

At every node, the sum of all currents entering or leaving a node must equal zero. What this law means physically is that charge cannot accumulate in a node; what goes in must come out. In the example, Figure 4.1, below we have a three-node circuit and thus have three KCL equations.

$$\begin{aligned}(-i) - i_1 &= 0\\ i_1 - i_2 &= 0\\ i + i_2 &= 0\end{aligned}$$

Note that the current entering a node is the negative of the current leaving the node.

Given any two of these KCL equations, we can find the other by adding or subtracting them. Thus, one of them is redundant and, in mathematical terms, we can discard any one of them. The convention is to discard the equation for the (unlabeled) node at the bottom of the circuit.

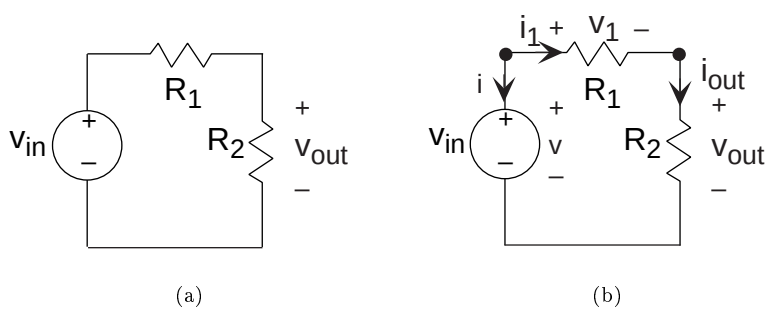

Figure 4.2: The circuit shown is perhaps the simplest circuit that performs a signal processing function. The input is provided by the voltage source v_{in} and the output is the voltage v_{out} across the resistor labelled R_2.

Exercise 4.1 ***(Solution on p. 13.)***

In writing KCL equations, you will find that in an n-node circuit, exactly one of them is always redundant. Can you sketch a proof of why this might be true? Hint: It has to do with the fact that charge won't accumulate in one place on its own.

[3] http://en.wikipedia.org/wiki/Gustav_Kirchhoff

4.2 Kirchhoff's Voltage Law (KVL)

The voltage law says that the sum of voltages around every closed loop in the circuit must equal zero. A closed loop has the obvious definition: Starting at a node, trace a path through the circuit that returns you to the origin node. KVL expresses the fact that electric fields are conservative: The total work performed in moving a test charge around a closed path is zero. The KVL equation for our circuit is

$$v_1 + v_2 - v = 0$$

In writing KVL equations, we follow the convention that an element's voltage enters with a plus sign when traversing the closed path, we go from the positive to the negative of the voltage's definition.

For the example circuit (Figure 4.2), we have three **v-i** relations, two KCL equations, and one KVL equation for solving for the circuit's six voltages and currents.

$$\begin{aligned}
\text{v-i:} \quad & v = v_{\text{in}} \\
& v_1 = R_1 i_1 \\
& v_{\text{out}} = R_2 i_{\text{out}} \\
\text{KCL:} \quad & (-i) - i_1 = 0 \\
& i_1 - i_{\text{out}} = 0 \\
\text{KVL:} \quad & -v + v_1 + v_{\text{out}} = 0
\end{aligned}$$

We have exactly the right number of equations! Eventually, we will discover shortcuts for solving circuit problems; for now, we want to eliminate all the variables but v_{out} and determine how it depends on v_{in} and on resistor values. The KVL equation can be rewritten as $v_{\text{in}} = v_1 + v_{\text{out}}$. Substituting into it the resistor's **v-i** relation, we have $v_{\text{in}} = R_1 i_1 + R_2 i_{\text{out}}$. Yes, we temporarily eliminate the quantity we seek. Though not obvious, it is the simplest way to solve the equations. One of the KCL equations says $i_1 = i_{\text{out}}$, which means that $v_{\text{in}} = R_1 i_{\text{out}} + R_2 i_{\text{out}} = (R_1 + R_2)\, i_{\text{out}}$. Solving for the current in the output resistor, we have $i_{\text{out}} = \frac{v_{\text{in}}}{R_1 + R_2}$. **We have now solved the circuit**: We have expressed one voltage or current in terms of sources and circuit-element values. To find any other circuit quantities, we can back substitute this answer into our original equations or ones we developed along the way. Using the **v-i** relation for the output resistor, we obtain the quantity we seek.

$$v_{\text{out}} = \frac{R_2}{R_1 + R_2} v_{\text{in}}$$

Exercise 4.2 ***(Solution on p. 13.)***

Referring back to Figure 4.1, a circuit should serve some useful purpose. What kind of system does our circuit realize and, in terms of element values, what are the system's parameter(s)?

Solutions to Exercises in Chapter 4

Solution to Exercise 4.1 (p. 11)

KCL says that the sum of currents entering or leaving a node must be zero. If we consider two nodes together as a "supernode", KCL applies as well to currents entering the combination. Since no currents enter an entire circuit, the sum of currents must be zero. If we had a two-node circuit, the KCL equation of one **must** be the negative of the other, We can combine all but one node in a circuit into a supernode; KCL for the supernode must be the negative of the remaining node's KCL equation. Consequently, specifying $n-1$ KCL equations always specifies the remaining one.

Solution to Exercise 4.2 (p. 12)

The circuit serves as an amplifier having a gain of $\frac{R_2}{R_1+R_2}$.

Chapter 5

Lesson 2

5.1 Series and Parallel Circuits[1]

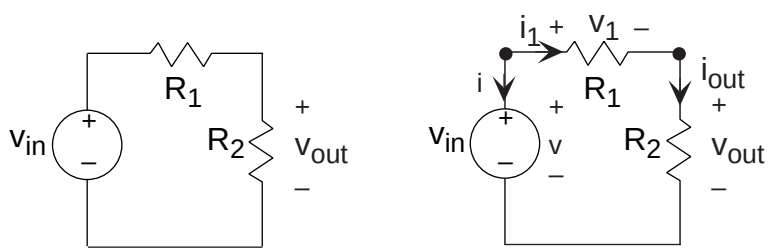

(a) (b)

Figure 5.1: The circuit shown is perhaps the simplest circuit that performs a signal processing function. The input is provided by the voltage source v_{in} and the output is the voltage v_{out} across the resistor labelled R_2.

The results shown in other modules (circuit elements (Chapter 4), KVL and KCL (Chapter 4), interconnection laws (Chapter 4)) with regard to this circuit (Figure 5.1), and the values of other currents and voltages in this circuit as well, have profound implications.

Resistors connected in such a way that current from one must flow **only** into another—currents in all resistors connected this way have the same magnitude—are said to be connected in **series**. For the two series-connected resistors in the example, **the voltage across one resistor equals the ratio of that resistor's value and the sum of resistances times the voltage across the series combination**. This concept is so pervasive it has a name: **voltage divider**.

The **input-output relationship** for this system, found in this particular case by voltage divider, takes the form of a ratio of the output voltage to the input voltage.

$$\frac{v_{\text{out}}}{v_{\text{in}}} = \frac{R_2}{R_1 + R_2}$$

In this way, we express how the components used to build the system affect the input-output relationship. Because this analysis was made with ideal circuit elements, we might expect this relation to break down if

[1] This content is available online at <http://cnx.org/content/m10674/2.10/>.

the input amplitude is too high (Will the circuit survive if the input changes from 1 volt to one million volts?) or if the source's frequency becomes too high. In any case, this important way of expressing input-output relationships—as a ratio of output to input—pervades circuit and system theory.

The current i_1 is the current flowing out of the voltage source. Because it equals i_2, we have that $\frac{v_{\text{in}}}{i_1} = R_1 + R_2$:

> RESISTORS IN SERIES: The series combination of two resistors acts, as far as the voltage source is concerned, as a single resistor having a value equal to the sum of the two resistances.

This result is the first of several equivalent circuit ideas: In many cases, a complicated circuit when viewed from its terminals (the two places to which you might attach a source) appears to be a single circuit element (at best) or a simple combination of elements at worst. Thus, the equivalent circuit for a series combination of resistors is a single resistor having a resistance equal to the sum of its component resistances.

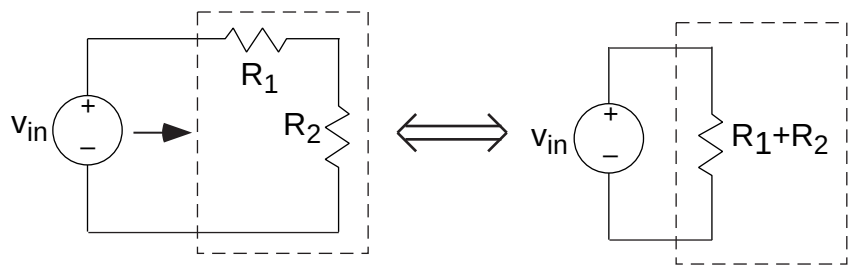

Figure 5.2: The resistor (on the right) is equivalent to the two resistors (on the left) and has a resistance equal to the sum of the resistances of the other two resistors.

Thus, the circuit the voltage source "feels" (through the current drawn from it) is a single resistor having resistance $R_1 + R_2$. Note that in making this equivalent circuit, the output voltage can no longer be defined: The output resistor labeled R_2 no longer appears. Thus, this equivalence is made strictly from the voltage source's viewpoint.

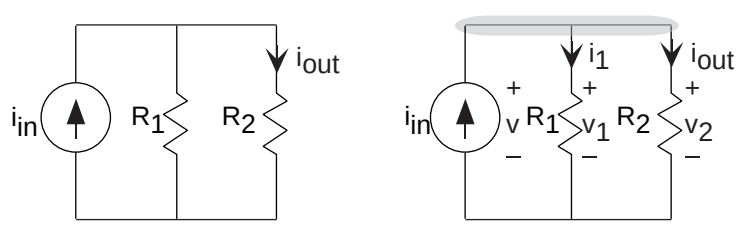

Figure 5.3: A simple parallel circuit.

One interesting simple circuit (Figure 5.3) has two resistors connected side-by-side, what we will term a **parallel** connection, rather than in series. Here, applying KVL reveals that all the voltages are identical: $v_1 = v$ and $v_2 = v$. This result typifies parallel connections. To write the KCL equation, note that the top

node consists of the entire upper interconnection section. The KCL equation is $i_{\text{in}} - i_1 - i_2 = 0$. Using the **v-i** relations, we find that

$$i_{\text{out}} = \frac{R_1}{R_1 + R_2} i_{\text{in}}$$

Exercise 5.1.1 ***(Solution on p. 28.)***

Suppose that you replaced the current source in Figure 5.3 by a voltage source. How would i_{out} be related to the source voltage? Based on this result, what purpose does this revised circuit have?

This circuit highlights some important properties of parallel circuits. You can easily show that the parallel combination of R_1 and R_2 has the **v-i** relation of a resistor having resistance $\left(\frac{1}{R_1} + \frac{1}{R_2}\right)^{-1} = \frac{R_1 R_2}{R_1 + R_2}$. A shorthand notation for this quantity is $R_1 \parallel R_2$. As the reciprocal of resistance is conductance[2], we can say that **for a parallel combination of resistors, the equivalent conductance is the sum of the conductances**.

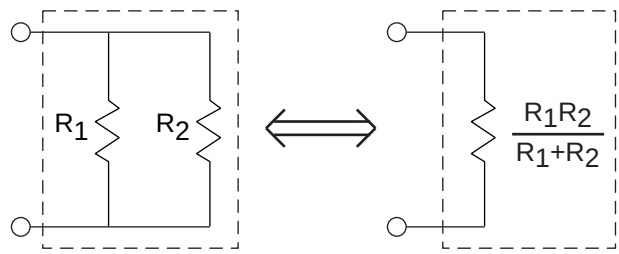

Figure 5.4

Similar to voltage divider (p. 15) for series resistances, we have **current divider** for parallel resistances. The current through a resistor in parallel with another is the ratio of the conductance of the first to the sum of the conductances. Thus, for the depicted circuit, $i_2 = \frac{G_2}{G_1 + G_2} i$. Expressed in terms of resistances, current divider takes the form of the resistance of the **other** resistor divided by the sum of resistances: $i_2 = \frac{R_1}{R_1 + R_2} i$.

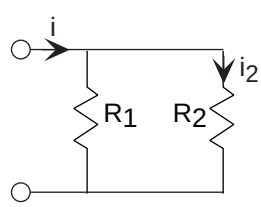

Figure 5.5

[2] "Ideal Circuit Elements": Section Resistor <http://cnx.org/content/m0012/latest/#res>

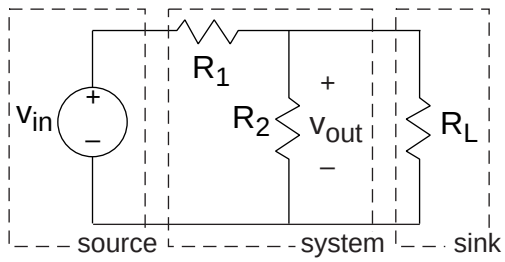

Figure 5.6: The simple attenuator circuit (Figure 5.1) is attached to an oscilloscope's input. The input-output relation for the above circuit without a load is: $v_{\text{out}} = \frac{R_2}{R_1+R_2} v_{\text{in}}$.

Suppose we want to pass the output signal into a voltage measurement device, such as an oscilloscope or a voltmeter. In system-theory terms, we want to pass our circuit's output to a sink. For most applications, we can represent these measurement devices as a resistor, with the current passing through it driving the measurement device through some type of display. In circuits, a sink is called a **load**; thus, we describe a system-theoretic sink as a load resistance R_L. Thus, we have a complete system built from a cascade of three systems: a source, a signal processing system (simple as it is), and a sink.

We must analyze afresh how this revised circuit, shown in Figure 5.6, works. Rather than defining eight variables and solving for the current in the load resistor, let's take a hint from other analysis (series rules (p. 15), parallel rules (p. 17)). Resistors R_2 and R_L are in a **parallel** configuration: The voltages across each resistor are the same while the currents are not. Because the voltages are the same, we can find the current through each from their **v-i** relations: $i_2 = \frac{v_{\text{out}}}{R_2}$ and $i_L = \frac{v_{\text{out}}}{R_L}$. Considering the node where all three resistors join, KCL says that the sum of the three currents must equal zero. Said another way, the current entering the node through R_1 must equal the sum of the other two currents leaving the node. Therefore, $i_1 = i_2 + i_L$, which means that $i_1 = v_{\text{out}} \left(\frac{1}{R_2} + \frac{1}{R_L} \right)$.

Let R_{eq} denote the equivalent resistance of the parallel combination of R_2 and R_L. Using R_1's **v-i** relation, the voltage across it is $v_1 = \frac{R_1 v_{\text{out}}}{R_{\text{eq}}}$. The KVL equation written around the leftmost loop has $v_{\text{in}} = v_1 + v_{\text{out}}$; substituting for v_1, we find

$$v_{\text{in}} = v_{\text{out}} \left(\frac{R_1}{R_{\text{eq}}} + 1 \right)$$

or

$$\frac{v_{\text{out}}}{v_{\text{in}}} = \frac{R_{\text{eq}}}{R_1 + R_{\text{eq}}}$$

Thus, we have the input-output relationship for our entire system having the form of voltage divider, but it does **not** equal the input-output relation of the circuit without the voltage measurement device. We can not measure voltages reliably unless the measurement device has little effect on what we are trying to measure. We should look more carefully to determine if any values for the load resistance would lessen its impact on the circuit. Comparing the input-output relations before and after, what we need is $R_{\text{eq}} \simeq R_2$. As $R_{\text{eq}} = \left(\frac{1}{R_2} + \frac{1}{R_L} \right)^{-1}$, the approximation would apply if $\frac{1}{R_2} \gg \frac{1}{R_L}$ or $R_2 \ll R_L$. This is the condition we seek:

> VOLTAGE MEASUREMENT: Voltage measurement devices must have large resistances compared with that of the resistor across which the voltage is to be measured.

Exercise 5.1.2 ***(Solution on p. 28.)***

Let's be more precise: How much larger would a load resistance need to be to affect the input-output relation by less than 10%? by less than 1%?

Example 5.1

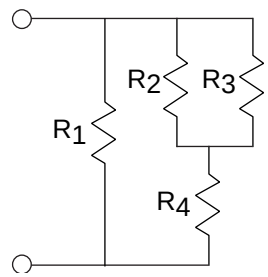

Figure 5.7

We want to find the total resistance of the example circuit. To apply the series and parallel combination rules, it is best to first determine the circuit's structure: What is in series with what and what is in parallel with what at both small- and large-scale views. We have R_2 in parallel with R_3; this combination is in series with R_4. This series combination is in parallel with R_1. Note that in determining this structure, we started **away** from the terminals, and worked toward them. In most cases, this approach works well; try it first. The total resistance expression mimics the structure:

$$R_T = R_1 \parallel (R_2 \parallel R_3 + R_4)$$

$$R_T = \frac{R_1R_2R_3 + R_1R_2R_4 + R_1R_3R_4}{R_1R_2 + R_1R_3 + R_2R_3 + R_2R_4 + R_3R_4}$$

Such complicated expressions typify circuit "simplifications." A simple check for accuracy is the units: Each component of the numerator should have the same units (here Ω^3) as well as in the denominator (Ω^2). The entire expression is to have units of resistance; thus, the ratio of the numerator's and denominator's units should be ohms. Checking units does not guarantee accuracy, but can catch many errors.

Another valuable lesson emerges from this example concerning the difference between cascading systems and cascading circuits. In system theory, systems can be cascaded without changing the input-output relation of intermediate systems. In cascading circuits, this ideal is rarely true **unless** the circuits are so **designed**. Design is in the hands of the engineer; he or she must recognize what have come to be known as loading effects. In our simple circuit, you might think that making the resistance R_L large enough would do the trick. Because the resistors R_1 and R_2 can have virtually any value, you can never make the resistance of your voltage measurement device big enough. Said another way, **a circuit cannot be designed in isolation that will work in cascade with all other circuits**. Electrical engineers deal with this situation through the notion of **specifications**: Under what conditions will the circuit perform as designed? Thus, you will find that oscilloscopes and voltmeters have their internal resistances clearly stated, enabling you to determine whether the voltage you measure closely equals what was present before they were attached to your circuit. Furthermore, since our resistor circuit functions as an attenuator, with the attenuation (a fancy word for gains less than one) depending only on the ratio of the two resistor values $\frac{R_2}{R_1+R_2} = \left(1 + \frac{R_1}{R_2}\right)^{-1}$, we can select **any** values for the two resistances we want to achieve the desired attenuation. The designer of this

circuit must thus specify not only what the attenuation is, but also the resistance values employed so that integrators—people who put systems together from component systems—can combine systems together and have a chance of the combination working.

Figure 5.8 (series and parallel combination rules) summarizes the series and parallel combination results. These results are easy to remember and very useful. Keep in mind that for series combinations, voltage and resistance are the key quantities, while for parallel combinations current and conductance are more important. In series combinations, the currents through each element are the same; in parallel ones, the voltages are the same.

series and parallel combination rules

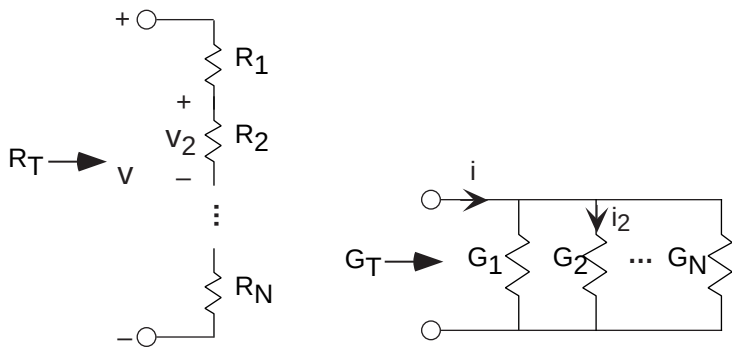

(a) series combination rule (b) parallel combination rule

Figure 5.8: Series and parallel combination rules. (a) $R_T = \sum_{n=1}^{N} R_n$ $v_n = \frac{R_n}{R_T} v$ (b) $G_T = \sum_{n=1}^{N} G_n$ $i_n = \frac{G_n}{G_T} i$

Exercise 5.1.3 ***(Solution on p. 28.)***

Contrast a series combination of resistors with a parallel one. Which variable (voltage or current) is the same for each and which differs? What are the equivalent resistances? When resistors are placed in series, is the equivalent resistance bigger, in between, or smaller than the component resistances? What is this relationship for a parallel combination?

5.2 Creating Circuits in Multisim[3]

5.2.1 Circuit Wizards

Multisim provides several circuit wizards, which can aid designers by quickly producing circuits to match specifications. The circuits wizards provided are listed in . To use a circuit wizard, select Tools/Circuit Wizards.

[3]This content is available online at <http://cnx.org/content/m13731/1.2/>.

Figure 5.9: Circuit Wizards

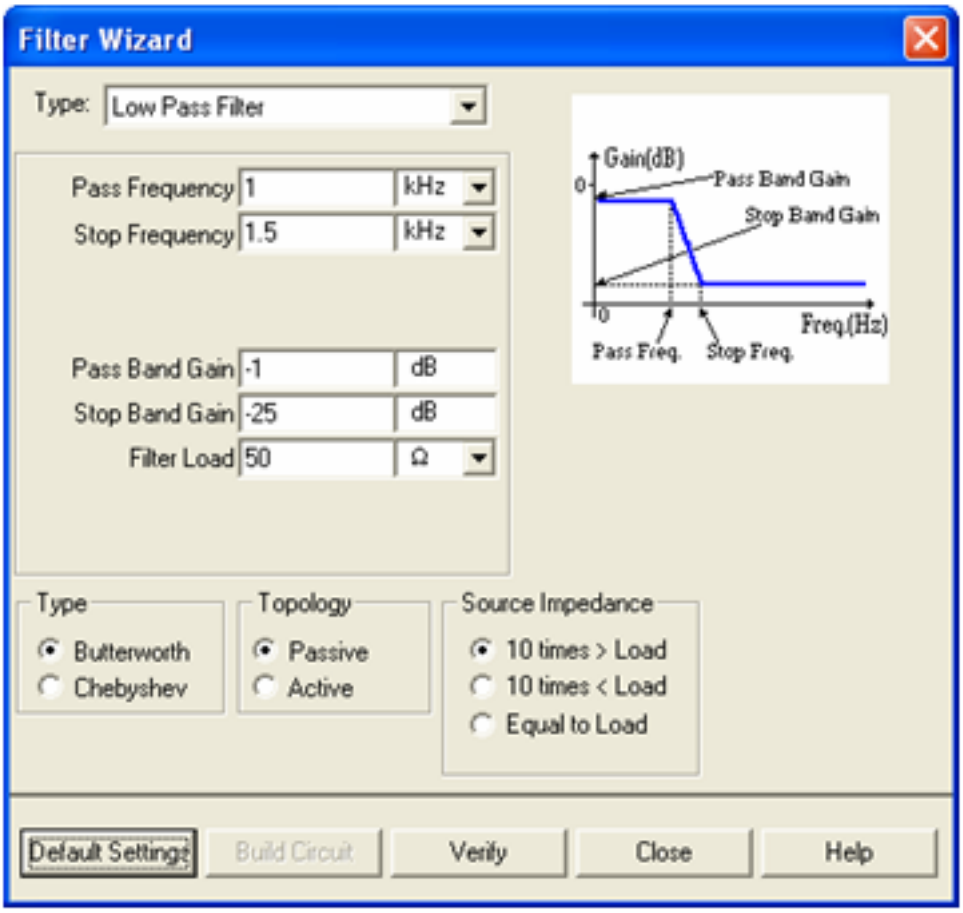

Figure 5.10: Filter Wizard Dialog Box

Use the 555 Timer Wizard to build astable and monostable oscillator circuits that use the 555 timer.

The Multisim Filter Wizard helps design numerous types of filters by entering the specifications into its fields.

The Common Emitter BJT Amplifier Wizard helps design common emitter amplifier circuits by entering the desired specifications into its fields. The Multisim MOSFET Amplifier Wizard helps design MOSFET amplifier circuits. The Multisim Opamp Wizard helps design the following opamp circuits. Users can enter the desired specifications in its fields:

- Inverting Amplifier.
- Non-inverting Amplifier.
- Difference Amplifier.
- Inverted Summing Amplifier.
- Non-inverted Summing Amplifier.
- Scaling Adder.

5.3 Electricity in Simple, Series, and Parallel Circuits[4]

Ohm's Law[5] – Ohm's Law describes the fundamental relationship between voltage, resistance, and current. This Formula Solver! Series program shows the step-by-step solution for using any two values (which you can enter yourself) to find the third.

Current in a Simple Circuit[6] – Current is defined as the flow of electricity through a circuit over time. This Formula Solver! Series program shows the step-by-step solution for finding current, charge, or time from the other two values (which you can enter yourself).

Current in a Parallel Circuit[7] – Current is a function of voltage and resistance. This Formula Solver! Series program shows the step-by-step solution for finding current in parallel circuits using your own voltage and resistance values.

Power in a Simple Circuit[8] – In the world of electricity, power is the product of current and voltage. This Formula Solver! Series program shows the step-by-step solution for finding power, current, or voltage from the other two values (which you can enter yourself).

Power in a Parallel Circuit[9] – In parallel circuits, power is a function of current and voltage. This Formula Solver! Series program shows the step-by-step solution for using voltage and resistance to find current and power (all with your own values).

Resistance in a Series Circuit[10] – This Formula Solver! Series program shows the step-by-step solution for finding resistance in a series circuit (using up to four resistance values which you can enter yourself).

Resistance in a Parallel Circuit[11] – This Formula Solver! Series program shows the step-by-step solution for finding electrical resistance in parallel circuits (using up to four resistance values which you can enter yourself).

5.4 Lesson 3

5.4.1 Norton Equivalent Circuits[12]

As you might expect, equivalent circuits come in two forms: the voltage-source oriented Thévenin equivalent (Section 5.4.2) and the current-source oriented **Norton equivalent** (see figure (Figure 5.11)).

[4] This content is available online at <http://cnx.org/content/m15610/1.5/>.
[5] http://www.college-cram.com/study/physics/electricity/ohms-law/
[6] http://www.college-cram.com/study/physics/electricity/current-in-a-simple-circuit/
[7] http://www.college-cram.com/study/physics/electricity/current-in-a-parallel-circuit/
[8] http://www.college-cram.com/study/physics/electricity/power-in-a-simple-circuit/
[9] http://www.college-cram.com/study/physics/electricity/power-in-a-parallel-circuit/
[10] http://www.college-cram.com/study/physics/electricity/resistance-in-a-series-circuit/
[11] http://www.college-cram.com/study/physics/electricity/resistance-in-a-parallel-circuit/
[12] This content is available online at <http://cnx.org/content/m0022/2.7/>.

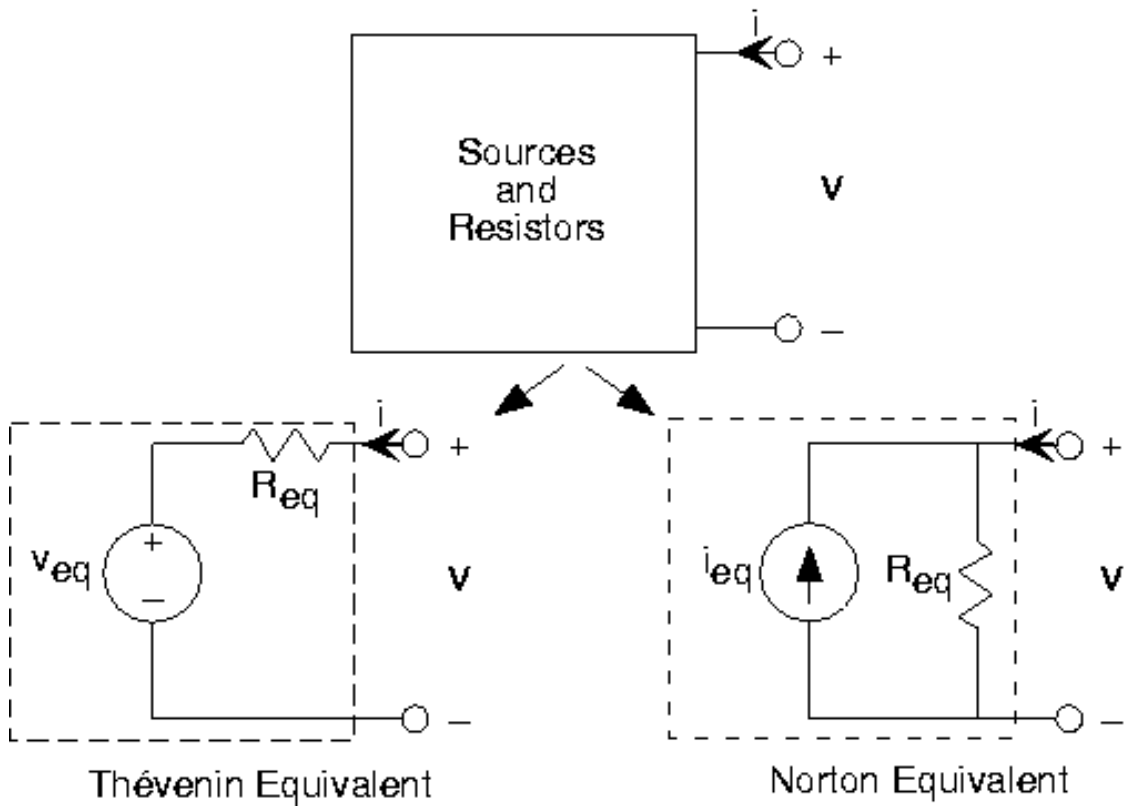

Figure 5.11: **All** circuits containing sources and resistors can be described by simpler equivalent circuits. Choosing the one to use depends on the application, not on what is actually inside the circuit.

To derive the latter, the **v-i** relation for the Thévenin equivalent can be written as

$$v = R_{\text{eq}} i + v_{\text{eq}} \tag{5.1}$$

or

$$i = \frac{v}{R_{\text{eq}}} - i_{\text{eq}} \tag{5.2}$$

where $i_{\text{eq}} = \frac{v_{\text{eq}}}{R_{\text{eq}}}$ is the Norton equivalent source. The Norton equivalent shown in the above figure (Figure 5.11) be easily shown to have this **v-i** relation. Note that both variations have the same equivalent resistance. The short-circuit current equals the negative of the Norton equivalent source.

Exercise 5.4.1.1 ***(Solution on p. 28.)***

Find the Norton equivalent circuit for the circuit below.

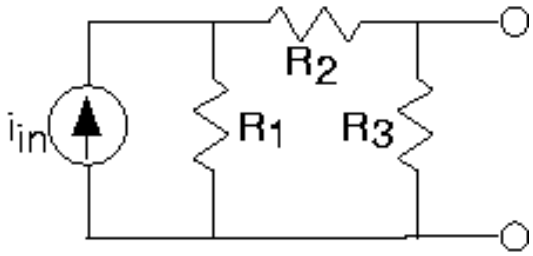

Figure 5.12

Equivalent circuits can be used in two basic ways. The first is to simplify the analysis of a complicated circuit by realizing the **any** portion of a circuit can be described by either a Thévenin or Norton equivalent. Which one is used depends on whether what is attached to the terminals is a series configuration (making the Thévenin equivalent the best) or a parallel one (making Norton the best).

Another application is modeling. When we buy a flashlight battery, either equivalent circuit can accurately describe it. These models help us understand the limitations of a battery. Since batteries are labeled with a voltage specification, they should serve as voltage sources and the Thévenin equivalent serves as the natural choice. If a load resistance R_L is placed across its terminals, the voltage output can be found using voltage divider: $v = \frac{v_{\text{eq}} R_L}{R_L + R_{\text{eq}}}$. If we have a load resistance much larger than the battery's equivalent resistance, then, to a good approximation, the battery does serve as a voltage source. If the load resistance is much smaller, we certainly don't have a voltage source (the output voltage depends directly on the load resistance). Consider now the Norton equivalent; the current through the load resistance is given by current divider, and equals $i = -\frac{i_{\text{eq}} R_{\text{eq}}}{R_L + R_{\text{eq}}}$. For a current that does not vary with the load resistance, this resistance should be much smaller than the equivalent resistance. If the load resistance is comparable to the equivalent resistance, the battery serves **neither** as a voltage source or a current course. Thus, when you buy a battery, you get a voltage source if its equivalent resistance is much **smaller** than the equivalent resistance of the circuit you attach it to. On the other hand, if you attach it to a circuit having a small equivalent resistance, you bought a current source.

5.4.2 Finding Thévenin Equivalent Circuits[13]

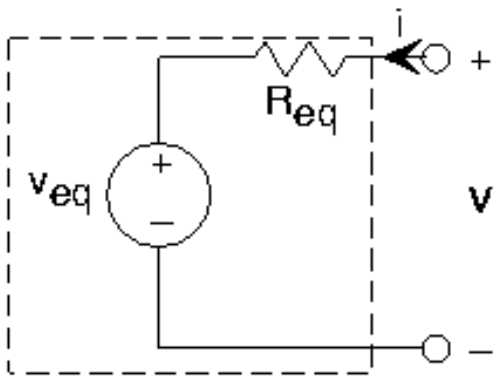

Figure 5.13: The Thévenin equivalent circuit.

For **any** circuit containing resistors and sources, the v-i relation will be of the form

$$v = R_{\text{eq}} i + v_{\text{eq}} \tag{5.3}$$

and the **Thévenin equivalent circuit** for any such circuit is that of Figure 5.13. This equivalence applies no matter how many sources or resistors may be present in the circuit. In an example[14], we know the circuit's construction and element values, and derive the equivalent source and resistance. Because Thévenin's theorem applies in general, we should be able to make measurements or calculations **only from the terminals** to determine the equivalent circuit.

To be more specific, consider the equivalent circuit of Figure 5.13. Let the terminals be open-circuited, which has the effect of setting the current i to zero. Because no current flows through the resistor, the voltage across it is zero (remember, Ohm's Law says that $v = Ri$). Consequently, by applying KVL we have that the so-called open-circuit voltage v_{oc} equals the Thévenin equivalent voltage. Now consider the situation when we set the terminal voltage to zero (short-circuit it) and measure the resulting current. Referring to the equivalent circuit, the source voltage now appears entirely across the resistor, leaving the short-circuit current to be $i_{\text{sq}} = -\frac{v_{\text{eq}}}{R_{\text{eq}}}$. From this property, we can determine the equivalent resistance.

$$v_{\text{eq}} = v_{\text{oc}} \tag{5.4}$$

$$R_{\text{eq}} = -\frac{v_{\text{oc}}}{i_{\text{sc}}} \tag{5.5}$$

Exercise 5.4.2.1 ***(Solution on p. 28.)***

Use the open/short-circuit approach to derive the Thévenin equivalent of the circuit shown in Figure 5.14.

[13] This content is available online at <http://cnx.org/content/m0021/2.10/>.

[14] "Equivalent Circuits: Resistors and Sources", Example 1 <http://cnx.org/content/m0020/latest/#ex1>

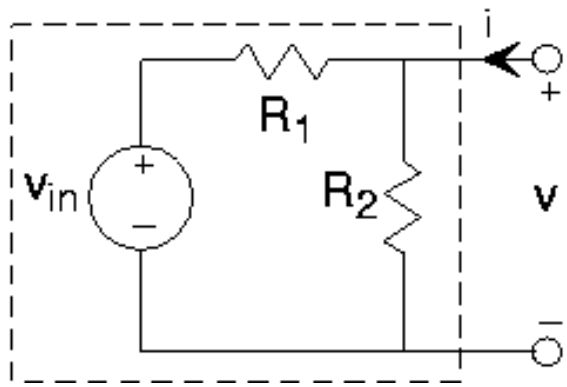

Figure 5.14

Example 5.2

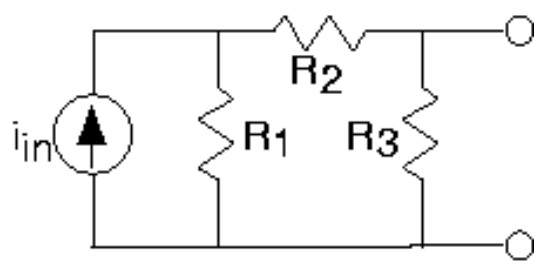

Figure 5.15

For the depicted circuit, let's derive its Thévenin equivalent two different ways. Starting with the open/short-circuit approach, let's first find the open-circuit voltage v_{oc}. We have a current divider relationship as R_1 is in parallel with the series combination of R_2 and R_3. Thus, $v_{\text{oc}} = \frac{i_{\text{in}} R_3 R_1}{R_1+R_2+R_3}$. When we short-circuit the terminals, no voltage appears across R_3, and thus no current flows through it. In short, R_3 does not affect the short-circuit current, and can be eliminated. We again have a current divider relationship: $i_{\text{sc}} = -\frac{i_{\text{in}} R_1}{R_1+R_2}$. Thus, the Thévenin equivalent resistance is $\frac{R_3(R_1+R_2)}{R_1+R_2+R_3}$.

To verify, let's find the equivalent resistance by reaching inside the circuit and setting the current source to zero. Because the current is now zero, we can replace the current source by an open circuit. From the viewpoint of the terminals, resistor R_3 is now in parallel with the series combination of R_1 and R_2. Thus, $R_{\text{eq}} = R_3 \parallel R_1 + R_2$, and we obtain the same result.

Solutions to Exercises in Chapter 5

Solution to Exercise 5.1.1 (p. 17)

Replacing the current source by a voltage source does not change the fact that the voltages are identical. Consequently, $v_{\text{in}} = R_2 i_{\text{out}}$ or $i_{\text{out}} = \frac{v_{\text{in}}}{R_2}$. This result does not depend on the resistor R_1, which means that we simply have a resistor (R_2) across a voltage source. The two-resistor circuit has no apparent use.

Solution to Exercise 5.1.2 (p. 18)

$R_{\text{eq}} = \frac{R_2}{1+\frac{R_2}{R_L}}$. Thus, a 10% change means that the ratio $\frac{R_2}{R_L}$ must be less than 0.1. A 1% change means that $\frac{R_2}{R_L} < 0.01$.

Solution to Exercise 5.1.3 (p. 20)

In a series combination of resistors, the current is the same in each; in a parallel combination, the voltage is the same. For a series combination, the equivalent resistance is the sum of the resistances, which will be larger than any component resistor's value; for a parallel combination, the equivalent conductance is the sum of the component conductances, which is larger than any component conductance. The equivalent resistance is therefore smaller than any component resistance.

Solution to Exercise 5.4.1.1 (p. 24)

$i_{\text{eq}} = \frac{R_1}{R_1+R_2} i_{\text{in}}$ and $R_{\text{eq}} = R_3 \parallel R_1 + R_2$.

Solution to Exercise 5.4.2.1 (p. 26)

$v_{\text{oc}} = \frac{R_2}{R_1+R_2} v_{\text{in}}$ and $i_{\text{sc}} = -\frac{v_{\text{in}}}{R_1}$ (resistor R_2 is shorted out in this case). Thus, $v_{\text{eq}} = \frac{R_2}{R_1+R_2} v_{\text{in}}$ and $R_{\text{eq}} = \frac{R_1 R_2}{R_1+R_2}$.

Bibliography

[1] P. V. Engelhardt; R. J. Beichner. Students8217; understanding of direct current resistive electrical circuits. *American Journal of Physics*, 72(1):98–115, 2004.

Index of Keywords and Terms

Keywords are listed by the section with that keyword (page numbers are in parentheses). Keywords do not necessarily appear in the text of the page. They are merely associated with that section. *Ex.* apples, § 1.1 (1) **Terms** are referenced by the page they appear on. *Ex.* apples, 1

A amperes, § 5.3(23)
amps, § 5.3(23)

C circuit, § 4(9), 9
college-cram, § 5.3(23)
current, § 5.3(23)
current divider, § 5.1(15), 17

E Electrical Circuits, § 2(3), § 3(5)
electricity, § 5.3(23)
equivalent circuit, § 5.4.2(25)
equivalent circuits, § 5.4.1(23)

I input-output relationship, § 5.1(15), 15
Instructor Information, § 2(3)

K Kirchhoff's Laws, 11
Kirchoff, § 4(9)

L load, § 5.1(15), 18

N node, § 4(9)
nodes, 11
Norton equivalent, 23
Norton equivalent circuits, § 5.4.1(23)

O ohm, § 5.3(23)
ohm's law, § 5.3(23)

P parallel, § 5.1(15), 16, 18
parallel circuit, § 5.3(23)
power, § 5.3(23)
Problem Based Learning, § 2(3), § 3(5)

R resistance, § 5.3(23)
resistor, § 5.3(23)

S series, § 5.1(15), 15
series circuit, § 5.3(23)
simple circuit, § 5.3(23)

T Thévenin equivalent circuit, 26
Thévenin equivalent circuits, § 5.4.2(25)

V voltage, § 5.3(23)
voltage divider, § 5.1(15), 15
volts, § 5.3(23)

Attributions

Collection: *Circuits*
Edited by: Megan Pee
URL: http://cnx.org/content/col10589/1.1/
License: http://creativecommons.org/licenses/by/2.0/

Module: "Two Light Bulbs and A Battery: an Elementary Circuits Activity (Instructor Information)"
By: Darryl Morrell
URL: http://cnx.org/content/m14369/1.2/
Pages: 3-4
Copyright: Darryl Morrell
License: http://creativecommons.org/licenses/by/2.0/

Module: "Two Light Bulbs and A Battery: an Elementary Circuits Activity"
By: Darryl Morrell
URL: http://cnx.org/content/m14370/1.1/
Pages: 5-7
Copyright: Darryl Morrell
License: http://creativecommons.org/licenses/by/2.0/

Module: "Electric Circuits and Interconnection Laws"
By: Don Johnson
URL: http://cnx.org/content/m0014/2.30/
Pages: 9-13
Copyright: Don Johnson
License: http://creativecommons.org/licenses/by/1.0

Module: "Series and Parallel Circuits"
By: Don Johnson
URL: http://cnx.org/content/m10674/2.10/
Pages: 15-20
Copyright: Don Johnson
License: http://creativecommons.org/licenses/by/3.0/

Module: "Creating Circuits in Multisim"
By: Janell Rodriguez
URL: http://cnx.org/content/m13731/1.2/
Pages: 20-22
Copyright: Janell Rodriguez, Erik Luther
License: http://creativecommons.org/licenses/by/2.0/

Module: "Electricity in Simple, Series, and Parallel Circuits"
By: Rudy Lopes
URL: http://cnx.org/content/m15610/1.5/
Page: 23
Copyright: Rudy Lopes
License: http://creativecommons.org/licenses/by/2.0/

Module: "Norton Equivalent Circuits"
By: Don Johnson
URL: http://cnx.org/content/m0022/2.7/
Pages: 23-25
Copyright: Don Johnson
License: http://creativecommons.org/licenses/by/1.0

Module: "Finding Thévenin Equivalent Circuits"
By: Don Johnson
URL: http://cnx.org/content/m0021/2.10/
Pages: 25-27
Copyright: Don Johnson
License: http://creativecommons.org/licenses/by/1.0

Circuits
Elementary circuit theory

About Connexions
Since 1999, Connexions has been pioneering a global system where anyone can create course materials and make them fully accessible and easily reusable free of charge. We are a Web-based authoring, teaching and learning environment open to anyone interested in education, including students, teachers, professors and lifelong learners. We connect ideas and facilitate educational communities.

Connexions's modular, interactive courses are in use worldwide by universities, community colleges, K-12 schools, distance learners, and lifelong learners. Connexions materials are in many languages, including English, Spanish, Chinese, Japanese, Italian, Vietnamese, French, Portuguese, and Thai. Connexions is part of an exciting new information distribution system that allows for **Print on Demand Books**. Connexions has partnered with innovative on-demand publisher QOOP to accelerate the delivery of printed course materials and textbooks into classrooms worldwide at lower prices than traditional academic publishers.