Building an Electrocardiogram (ECG) Diagnostic System

Collection Editor:
Christine Moran

Building an Electrocardiogram (ECG) Diagnostic System

Collection Editor:
Christine Moran

Authors:
Yuheng Chen
Leslie Goldberg
Christine Moran

Online:
< http://cnx.org/content/col10620/1.1/ >

C O N N E X I O N S

Rice University, Houston, Texas

This selection and arrangement of content as a collection is copyrighted by Christine Moran. It is licensed under the Creative Commons Attribution 2.0 license (http://creativecommons.org/licenses/by/2.0/).
Collection structure revised: December 19, 2008
PDF generated: October 26, 2012
For copyright and attribution information for the modules contained in this collection, see p. 17.

Table of Contents

1 Introduction: Building an Electrocardiogram (ECG) Based Diagnostic System 1
2 Collecting and Filtering Live ECG Signal 5
3 Algorithms for ECG Signal Analysis 11
Index 16
Attributions 17

Chapter 1

Introduction: Building an Electrocardiogram (ECG) Based Diagnostic System[1]

1.1 Introduction: Building an Electrocardiogram (ECG) Based Diagnostic System

Our goal is to build an Electrocardiogram (ECG) that not only calculates the heart rate automatically, but can also detect other heart abnormalities as well. This requires more advanced analysis of the ECG Signal. There are several steps that need to be accomplished in order to achieve this goal, as outlined in the flowchart below.

Overall Data Flowchart for an Automatic ECG

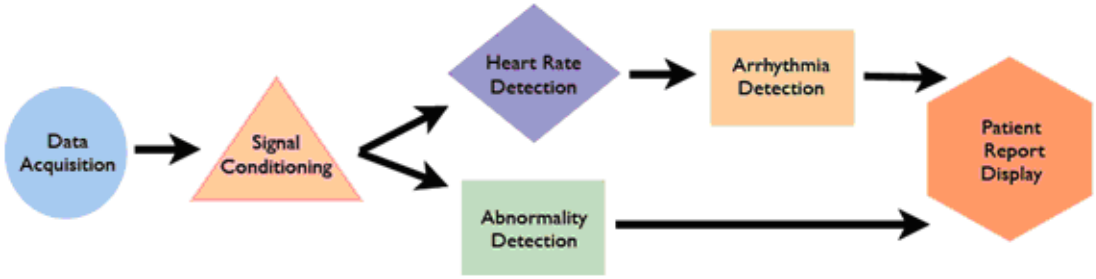

Figure 1.1: Breaks down the different steps which need to be accomplished in order to accomplish ECG signal analysis

Data acquisition and signal conditioning are covered in Collecting and Filtering Live ECG Signal[2] . The remaining phases, which are all related to signal analysis are covered in Algorithms for ECG Signal Analysis[3]

[1] This content is available online at <http://cnx.org/content/m18955/1.2/>.
[2] http://cnx.org/content/m18955/latest/m18956
[3] http://cnx.org/content/m18955/latest/m18957

.

Before we go into more detail about how to build an ECG, it is helpful to understand how the ECG works and how to interpret the data you receive.

1.1.1 Physiological Background of the ECG

An ECG is a non-invasive diagnostic device to monitor the condition of the heart through its electrical activity. This signal is acquired through externally located electrodes that adhere to the skin. A simple, clinical lead placement uses three leads: left arm, right arm and left leg (Figure 2). The electrical activity versus time forms an electrograph and can be used to determine and diagnose heart abnormalities and arrhythmias. This principle is based on Einthoven's law.

Electrode Placement for Three-Lead ECG

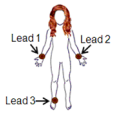

Figure 1.2: Lead 1 is attached to the right wrist, Lead 2 to the left wrist and Lead 3 is attached to the right ankle as a ground electrode.

All recorded electrical activity of the electrocardiogram corresponds to the net electrical current in the heart over time, depolarizing parts of the heart in sequence. The electrical impulse is initiated by the sinoatrial (SA) node. This causes the atria to contract and is evident on the ECG as the **P wave**. Next, there is a delay caused by the conduction of the impulse to the atrioventricular (AV) node such that the physical contraction of the atria have time to complete before the contraction of the ventricles. The **QRS complex** on the ECG is due to the depolarization of the ventricles, and occurs when the ventricles contract. Finally, the **T wave** on the ECG is due to the repolarization of the ventricles (*Pflanzer, 2004*). Therefore, each heartbeat corresponds to a pulse on the ECG beginning with each P wave and the ending with each T wave. The heart rate can be determined by determining the time it takes to complete one beat and is typically reported in beats per minute. Figure 3 demonstrates the characteristic shape of the waveform in a healthy patient.

Typical ECG Signal

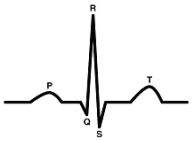

Figure 1.3: An example of the typical shape and location of the various components of an ECG signal.

1.1.2 Background Information on Monitored Heart Conditions

To perform automatic detection of an ECG signal, there needs to be something that clearly delineates a certain abnormality from other signals. Therefore, the signal processing selected is to detect ventricular hypertrophy and old myocardial infarctions. Luckily, these types of abnormalities are both very useful for doctors to diagnose a patient and have distinguishable ECG features.

Ventricular hypertrophy is the enlargement of either of the ventricles. Left ventricular hypertrophy is particularly common in athletes as well as an indicator of hypertension. It is also used in the Framingham risk equation to predict future cardiac problems the patient may face (*ECG Abnormalities, 2006*). One of its characteristic ECG patterns is the inverted T wave (Figure 4).

An Example of an ECG Signal with an Inverted T-wave

Figure 1.4

A myocardial infarction (a.k.a. heart attack) is caused by the complete blockage of one of the coronary arteries. The coronary artery is what supplies the heart muscle with blood. A blockage prevents blood from reaching the surrounding muscular tissue resulting in necrosis. This damage is permanent so the resulting ECG characteristic will remain with the patient. Therefore, the doctor can easily tell if a patient has had a heart attack in the past. The ECG of an old myocardial infarction is characterized by a significant Q wave (Figure 5). This means that the Q peak is unusually deep, usually with amplitude of about one-third that of the R peak (*Dubin, 2000*).

An Example of an ECG Signal with a Significant Q-wave

Figure 1.5

By building an ECG that can automatically detect these and potentially other heart abnormalities, it will be easier for doctors to monitor multiple patients. This is especially important in third world countries where there are often far too many patients in one clinic than one doctor or nurse can adequately care for.

Chapter 2

Collecting and Filtering Live ECG Signal[1]

2.1 Collecting ECG Signal: Hardware

Using the NI Elvis breadboard and data acquisition system, the ECG signal is collected from the three leads. Lead 1 is connected to the right arm, Lead 2 is connected to the left wrist and Lead 3 is connected to the right ankle (see Introduction: Building an ECG Based Diagnostic System[2] for more information about lead placement). The diodes placed between the input leads and the rest of the circuit are to protect the patient from any backflowing current.

[1] This content is available online at <http://cnx.org/content/m18956/1.2/>.
[2] http://cnx.org/content/m18956/latest/m18955

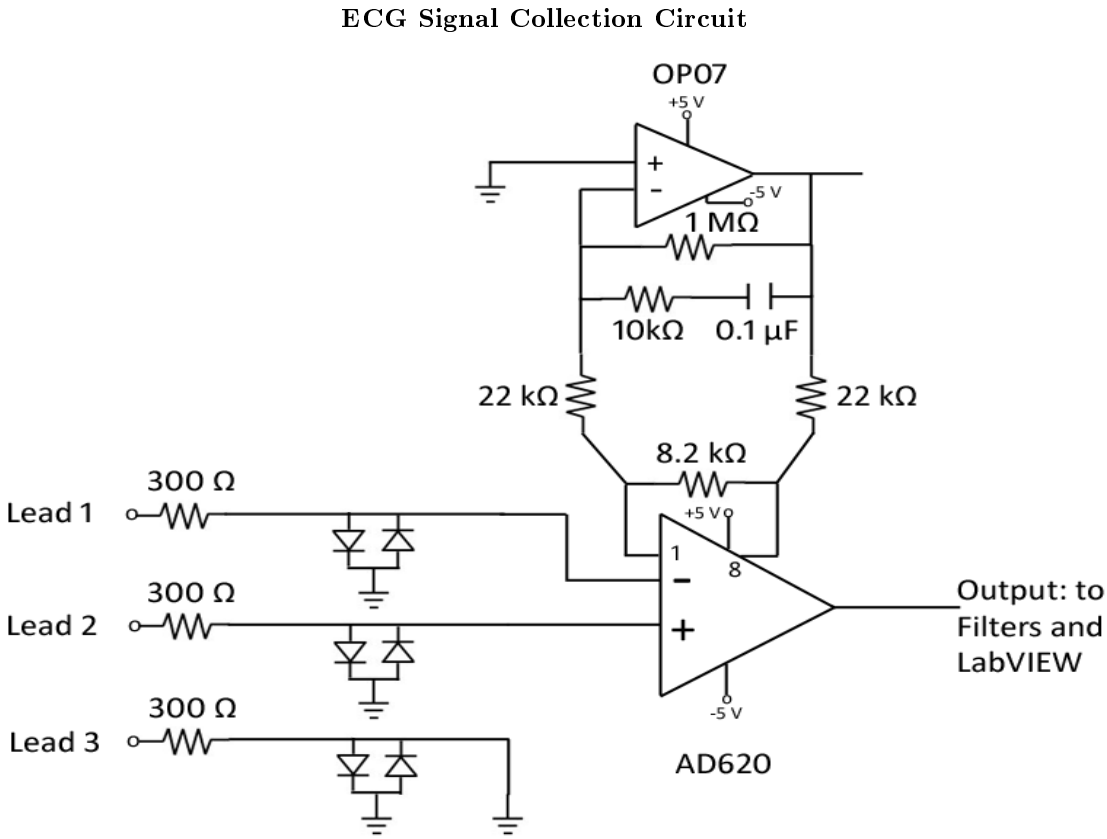

Figure 2.1: ECG signal collection circuit adapted from that of Radio Locman (www.rlocman.ru). The AD620 is used as a differential amplifier with a gain of ∼7 in order to combine the electrical signals from each of the leads into one easily readable signal.

In NI LabVIEW, the Data Acquisition Assistant (DAQ Assistant) is used to collect the signal after preliminary band pass filtering. The data is sampled at a rate of 1 kHz. Our LabVIEW VI is available here[3] .

2.2 Signal Conditioning

Signal filtering is necessary to help isolate the frequencies found in the ECG signal from the noise. With a three lead system, the majority of the noise comes from the electrical activity in the muscles on the arm, or electromyography (EMG) noise. EMG signals are present in a wide frequency band which overlaps with the ECG signal in the lower frequencies. Therefore, with this set-up, it is impossible to completely remove EMG noise from the ECG signal. Therefore, it is helpful for the patient to relax and remain still while the

[3] http://cnx.org/content/m18956/latest/ECG_LIVE.vi

data is being collected. In addition, 60 Hz noise is present from power line interference which also must be removed.

2.2.1 Analog Band Pass Filter Design

The first stage of filtering is an analog filter built onto the NI Elvis breadboard. It is a bandpass filter with cut-off frequencies of 0.5 and 150 Hz. This will help eliminate the high frequency noise from the muscles before the signal is greatly amplified.

Analog Bandpass Filter Circuit Diagram

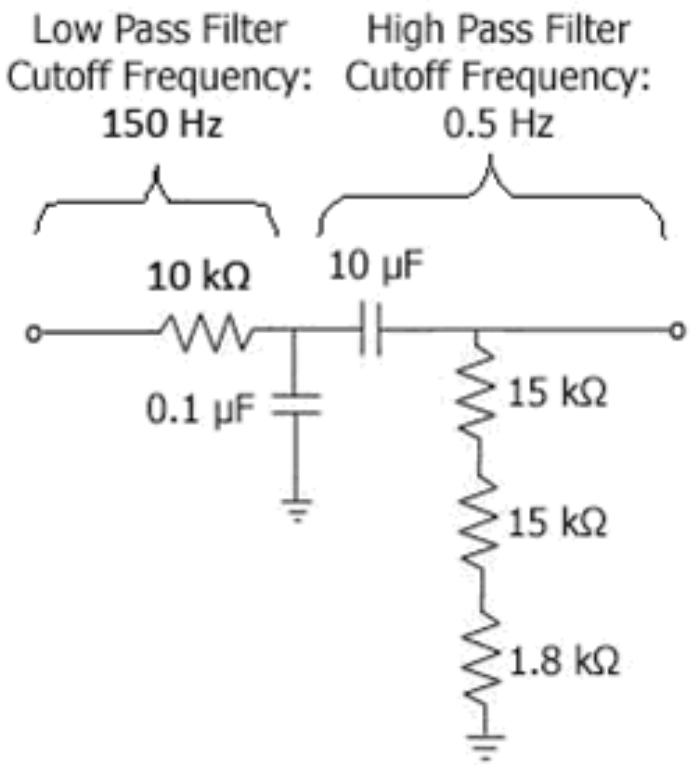

Figure 2.2

Bode Plot – Analog Band Pass Filter

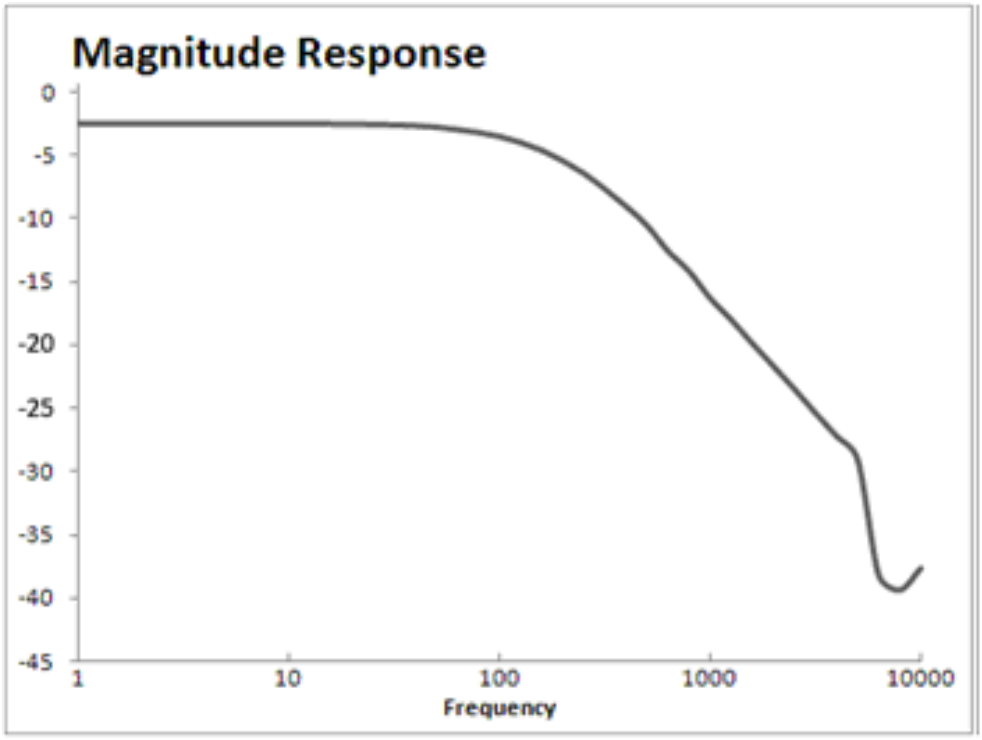

Figure 2.3

2.2.2 Digital Filters Using LabVIEW

Once the signal has been acquired by the DAQ Assistant into LabVIEW, it is processed by two additional filters and amplification of 100 times. The first filter is a band stop filter between 55 and 65 Hz to eliminate power line interference. A third order Butterworth (IIR) was used to implement this filter because it is low order and has a good frequency response for this signal.

Magnitude of the Frequency Response – Digital Band Stop Filter

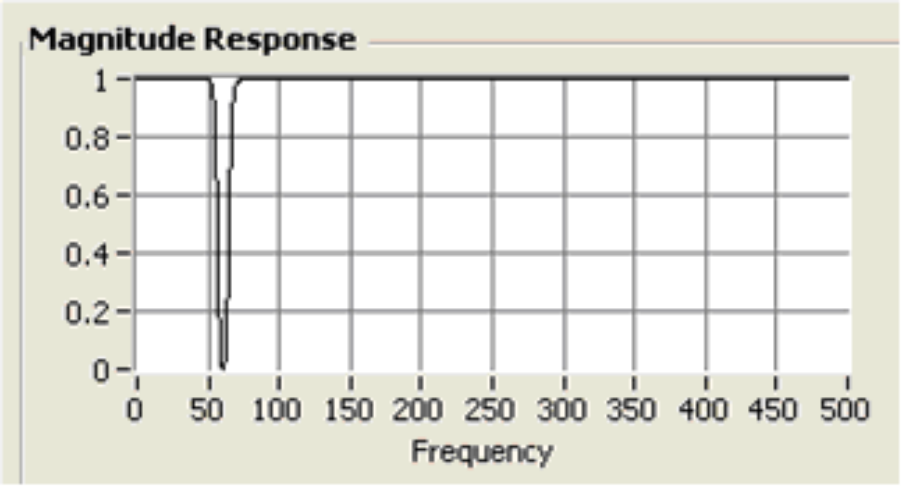

Figure 2.4

The second is a tenth order Butterworth low pass filter. The cutoff frequency of this filter is 80 Hz to further eliminate EMG noise. The ECG signal is located between 0.5 Hz and about 70-80 Hz depending on the individual.

Magnitude of the Frequency Response – Digital Low Pass Filter

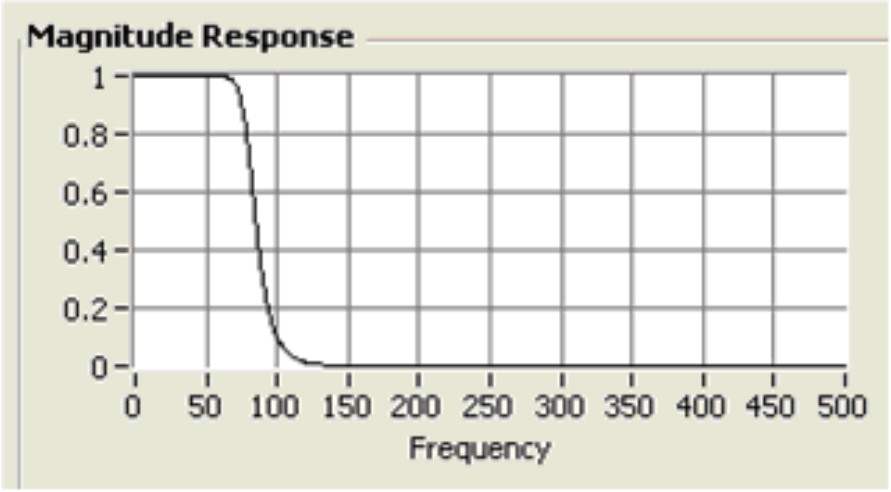

Figure 2.5

The resulting signal is displayed in real time in the graphical user interface, also designed in LabVIEW.

Chapter 3

Algorithms for ECG Signal Analysis[1]

3.1 ECG Signal Analysis: Abnormality Detection

The flowchart below breaks down the tasks needed to accomplish signal analysis in greater detail. Both LabVIEW and Matlab were used to accomplish these tasks.

Signal Analysis Flow Chart

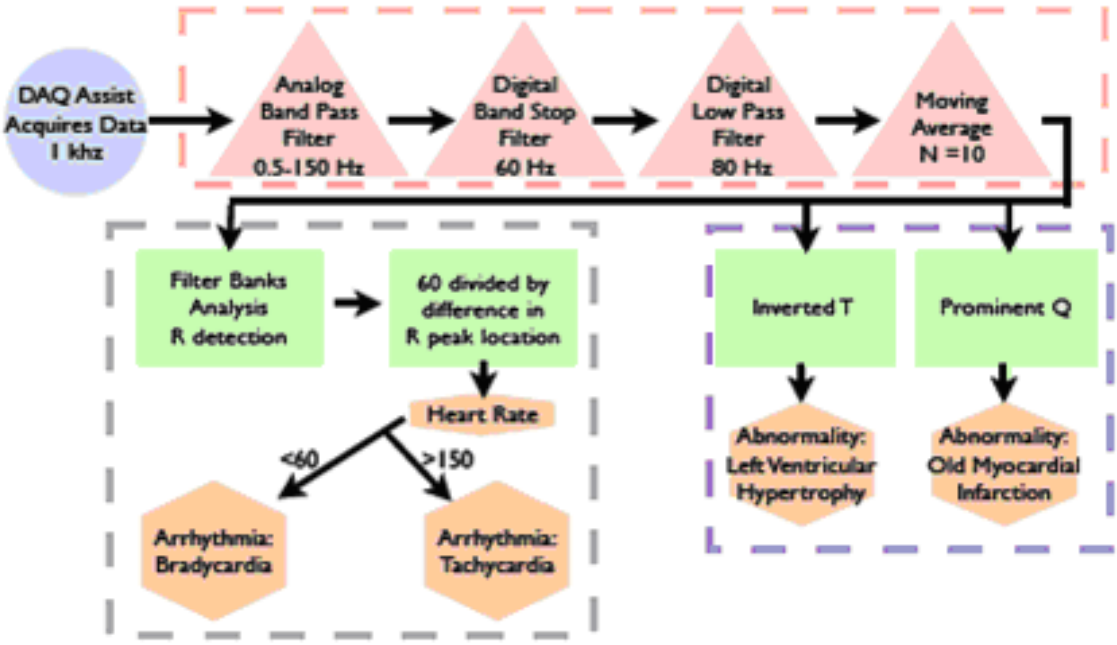

Figure 3.1

[1] This content is available online at <http://cnx.org/content/m18957/1.1/>.

3.2 Matlab Implementation of Filter Banks Analysis

Many scenarios deal with signals which contain specific energy distributions in the frequency domain. For example, with regard to the ECG, a significant proportion of the energy from the QRS complex extends to a frequency of 40 Hz, and even more if the Q, R, and S waves have very sharp morphologies. The P and T waves, in general, have a significant proportion of their energy only up to 10 Hz. Thus, a strategic approach to detecting heartbeats is to analyze different sub-bands of the ECG, rather than just the output of one filter which maximizes SNR of the QRS.

In this filter bank analysis technique we use 5 sub-bands, each one has bandwidth 5Hz. The ECG signal is processed by those 5 sub-band filters and downsampled. The downsampled signal is

$$\begin{aligned} W_l(z) &= \frac{1}{M}\sum_{k=0}^{M-1} U_l\left(z^{1/M}W^k\right) \\ &= \frac{1}{M}\sum_{k=0}^{M-1} H_l\left(z^{1/M}W^k\right)X\left(z^{1/M}W^k\right) \\ & \qquad l = 0, 1, \cdots, M-1. \end{aligned}$$

Figure 3.2

A variety of features which are indicative of the QRS complex can be designed by combining sub-bands of interest from l = 0, 1, . . . , M-1. For example a sum-of-absolute values feature P1 can be computed using sub-bands 1, 2, and 3.

$$P_1 = \sum_{i=1}^{3} \left|W_i(z)\right|$$

Figure 3.3

P1 has a value which corresponds to the energy in the frequency band [5.6, 22.5] Hz. Similarly, P2 and P3 can be computed using sub-bands {1, 2, 3, 4}, and {2, 3, 4}, respectively, and these values are proportional to the energy in their respective sub-bands. Heuristic beat detection logic can be used to incorporate some of the above features which are indicative of the QRS complex.

Figure 4 gives an overview of the sequential levels in the beat detection algorithm. The goal of the detection algorithm is to maximize the number of true positives (TP's), while keeping the number of false negatives (FN's) and false positives (FP's) to a minimum. Since it is not possible to arrive at this goal using one simple detector, multiple detectors with complementary FN's and FP's performances are simultaneously operated and the results of each fused together to arrive at an overall decision. The advantage of this strategy is that multiple features which are indicative of the QRS complex can be used to detect beats.

Beat Detection Algorithm Schematic

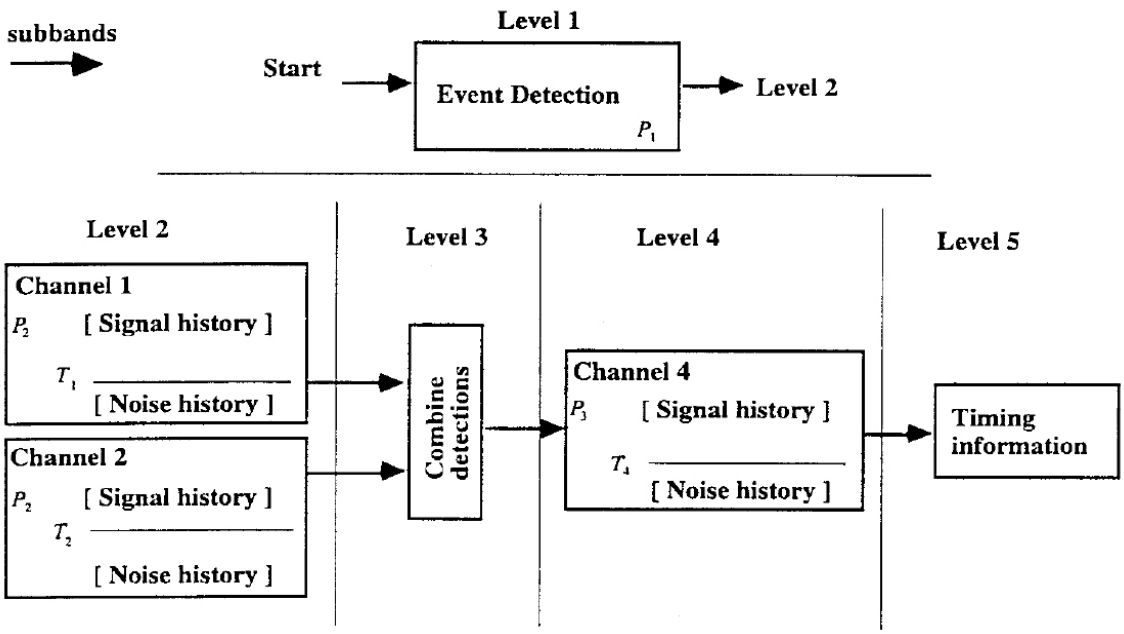

Figure 3.4

A one-channel beat detection block is described in Figure 5.

Schematic of One-Channel Beat Detection Block

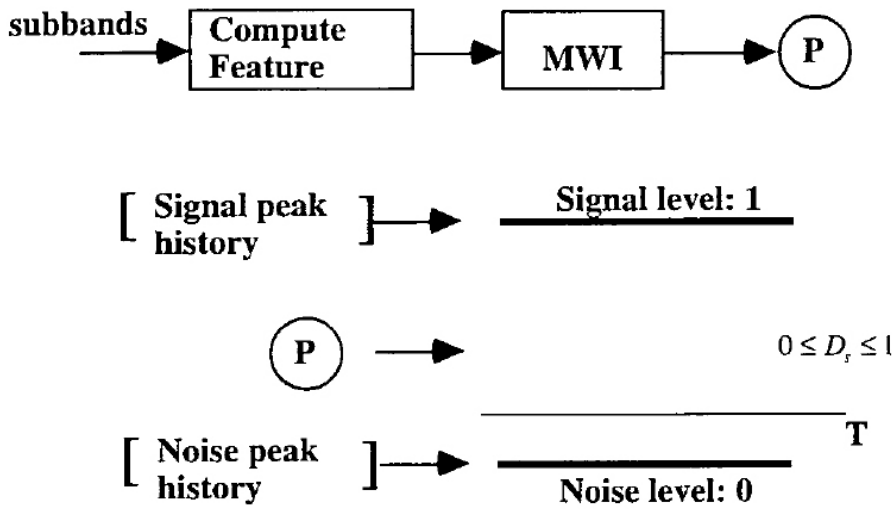

Figure 3.5

The detection strength Ds of an incoming feature (e.g., P1, P2, P3) is determined by comparing with the signal and noise levels (SL and NL, respectively):

$$D_s = \frac{P - N_L}{S_L - N_L}$$

Figure 3.6

If a feature's value is less than NL then Ds is limited at 0, and if it is above SL then DS is limited to one. When a feature has a greater than a specified threshold (preset between zero and one) it is classified as a signal peak and the signal history is updated with the feature's value. If the feature has a smaller than the threshold it is classified as a noise peak and the noise history is updated with the feature's value.

The detail operations of each level can be found in the paper by V. Afonso et al (*ECG beat detection using filter banks, IEEE Trans. Biomed. Eng. 46: 1999*). Also, download and run ECGmain.m[2] to test out filter banks. Supplementary mfiles: nqrsdetect.m[3] , ECGSigProc.m[4] , t.mat[5] , x.mat[6] .

[2] http://cnx.org/content/m18957/latest/ECGmain.m
[3] http://cnx.org/content/m18957/latest/nqrsdetect.m
[4] http://cnx.org/content/m18957/latest/ECGSigProcFB.m
[5] http://cnx.org/content/m18957/latest/t.mat
[6] http://cnx.org/content/m18957/latest/x.mat

3.3 LabVIEW Programming for Signal Processing and Interfacing

LabVIEW is used to not only process and acquire the signal, but to also develop an user friendly interface that automatically alerts the user to any abnormalities or arrhythmias detected. This particular ECG is developed to detect left ventricular hypertrophy and old myocardial infarction. It will also automatically display the heart rate and whether or not the patient's heart rate is within a healthy range.

The Graphical User Interface

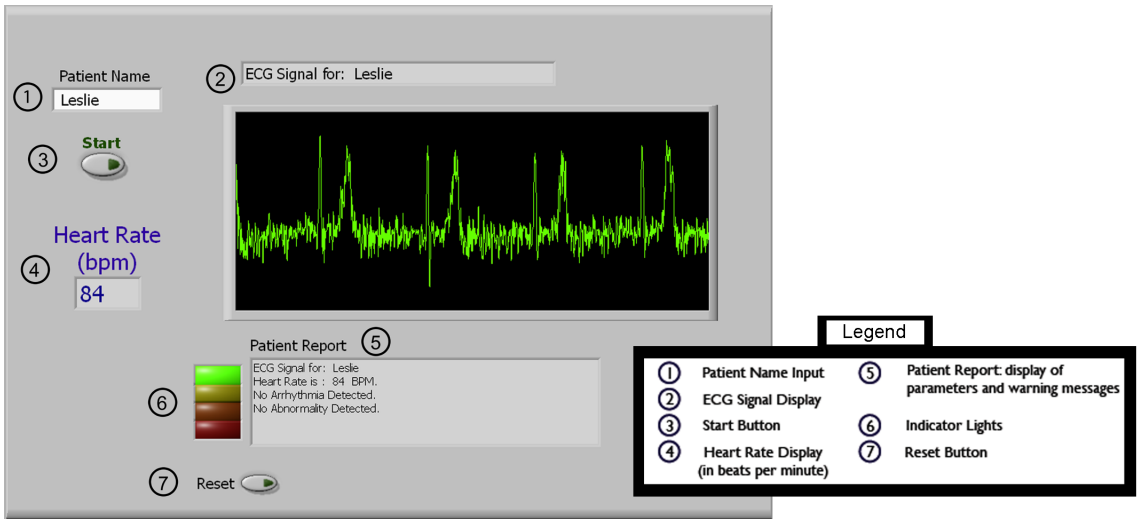

Figure 3.7: This view of the the GUI shows a normal, healthy ECG signal. The indicator lights (6) will change color depending on the diagnosis. Additionally, the green trace turns red if any abnormality or arrhythmia is detected.

The user interface consists of several useful features. First, there is a text input for the patient's name to avoid confusion in the clinic. Second, the ECG chart is automatically updated with the name and live signal data. Third, the user can control the data acquisition periods. The heart rate and any abnormalities are displayed in the patient report. The warning lights to the left of the patient report correspond to the current condition of the patient's ECG. If everything is normal, the green light is on and the signal is green. If an arrhythmia is detected, the yellow light turns on and a warning message will appear in the patient report that indicates the type. Similarly, the orange light turns on if an abnormality is detected and a warning message appears in the report. For either of these, the ECG trace turns red in the chart window. A red light indicates that no recognizable signal is being detected. This can mean that the patient has flat-lined, that the circuit board is not powered or that the leads are not connected properly. As a result, the warning message will ask the user to check the lead and power connections. Finally, the form can be reset between patients. You can download our VI here[7] to test it out.

[7] http://cnx.org/content/m18957/latest/ECG_LIVE.vi

Index of Keywords and Terms

Keywords are listed by the section with that keyword (page numbers are in parentheses). Keywords do not necessarily appear in the text of the page. They are merely associated with that section. *Ex.* apples, § 1.1 (1) **Terms** are referenced by the page they appear on. *Ex.* apples, 1

B beat detection, § 3(11)

C circuit diagram, § 2(5)

E ECG, § 1(1), § 2(5), § 3(11)

F filter banks, § 3(11)

H heart, § 1(1)

M matlab filter banks, § 3(11)

P P wave, 2
physiology, § 1(1)

Q QRS complex, 2

T T wave, 2

Attributions

Collection: *Building an Electrocardiogram (ECG) Diagnostic System*
Edited by: Christine Moran
URL: http://cnx.org/content/col10620/1.1/
License: http://creativecommons.org/licenses/by/2.0/

Module: "Introduction: Building an Electrocardiogram (ECG) Based Diagnostic System"
By: Christine Moran, Yuheng Chen, Leslie Goldberg
URL: http://cnx.org/content/m18955/1.2/
Pages: 1-3
Copyright: Christine Moran, Yuheng Chen, Leslie Goldberg
License: http://creativecommons.org/licenses/by/2.0/

Module: "Collecting and Filtering Live ECG Signal"
By: Christine Moran, Leslie Goldberg, Yuheng Chen
URL: http://cnx.org/content/m18956/1.2/
Pages: 5-10
Copyright: Christine Moran, Leslie Goldberg, Yuheng Chen
License: http://creativecommons.org/licenses/by/2.0/

Module: "Algorithms for ECG Signal Analysis"
By: Christine Moran, Yuheng Chen, Leslie Goldberg
URL: http://cnx.org/content/m18957/1.1/
Pages: 11-15
Copyright: Christine Moran, Yuheng Chen, Leslie Goldberg
License: http://creativecommons.org/licenses/by/2.0/

Building an Electrocardiogram (ECG) Diagnostic System
This Collection contains all the necessary background information you need to build an ECG that not only detects the heart rate but can also detect other heart abnormalities automatically. We include the circuit we used to build a three lead ECG as well as the LabVIEW and Matlab code we used.

About Connexions
Since 1999, Connexions has been pioneering a global system where anyone can create course materials and make them fully accessible and easily reusable free of charge. We are a Web-based authoring, teaching and learning environment open to anyone interested in education, including students, teachers, professors and lifelong learners. We connect ideas and facilitate educational communities.

Connexions's modular, interactive courses are in use worldwide by universities, community colleges, K-12 schools, distance learners, and lifelong learners. Connexions materials are in many languages, including English, Spanish, Chinese, Japanese, Italian, Vietnamese, French, Portuguese, and Thai. Connexions is part of an exciting new information distribution system that allows for **Print on Demand Books**. Connexions has partnered with innovative on-demand publisher QOOP to accelerate the delivery of printed course materials and textbooks into classrooms worldwide at lower prices than traditional academic publishers.