Odds and Ends*

Bill Wilson

This work is produced by The Connexions Project and licensed under the
Creative Commons Attribution License †

Abstract

Some relevant notes on double stub matching.

Just a few odds and ends. Consider the following (Figure 1: Cascaded Line) which is called a "cascaded line" problem. These are problems where we have two different transmission lines, with different characteristic impedances. Since we will give all of the distances in wavelengths, λ, we will assume that the λ we are talking about is the appropriate one for the line involved. If the phase velocities on the two lines is the same, then the physical lengths would correspond as well. The approach is relatively straight-forward. First let's plot $\frac{Z_L}{Z_0}$ on the Smith Chart (Figure 2: Smith Diagram). Then we have to rotate 0.2λ so that we can find $\frac{Z_A}{Z_{01}}$, the normalized impedance at point A, the junction between the two lines Figure 3 (Towards the Generator).

Cascaded Line

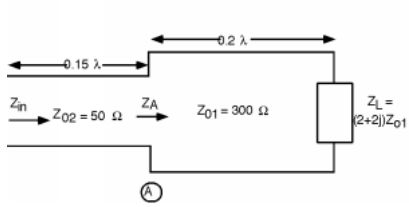

Figure 1

*Version 2.11: Jun 9, 2008 10:06 am -0500
†http://creativecommons.org/licenses/by/1.0

Smith Diagram

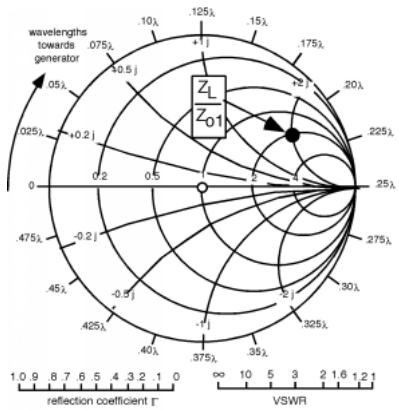

Figure 2

Thus, we find $\frac{Z_A}{Z_{01}} = 0.32 + 0.6i$. Now we have to **renormalize** the impedance so we can move to the line with the new impedance Z_{02}. Since $Z_{01} = 300\,(\Omega)$, $Z_A = 96 + -180i$. This is the load for the second length of line, so let's find $\frac{Z_A}{Z_{02}}$, which is easily found to be $1.9 + -3.6i$, so this can be plotted on the Smith Chart (Figure 4: More Smith Charts). Now we have to rotate around another 0.15λ so that we can find $\frac{Z_{\text{in}}}{Z_{02}}$. This appear to have a value of about $0.15 + -0.45i$, so $Z_{\text{in}} = 7.5 + -22.5i\Omega$Figure 5 (Even More Smith Charts).

Towards the Generator

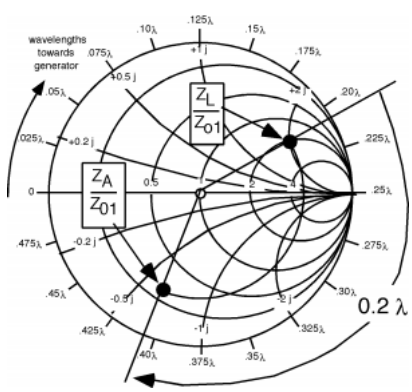

Figure 3

More Smith Charts

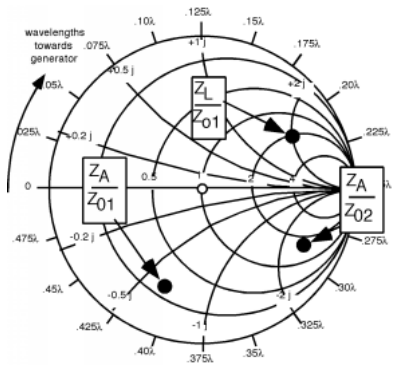

Figure 4

Even More Smith Charts

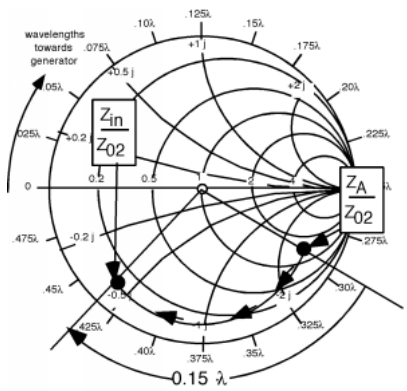

Figure 5

There is one application of the cascaded line problem that is used quite a bit in practice. Consider the following: We assume that we have a matched line with impedance Z_{02} and we connect it to another line whose impedance is Z_{01}Figure 6 (Simplified Cascaded Line). If we connect the two of them together directly, we will have a reflection coefficient at the junction given by

$$\Gamma = \frac{Z_{02} - Z_{01}}{Z_{02} + Z_{01}} \tag{1}$$

Simplified Cascaded Line

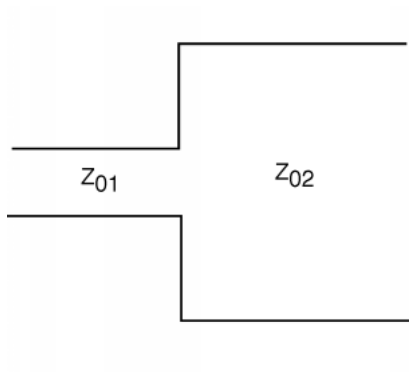

Figure 6

Now let's imagine that we have inserted a section of line with length $l = \frac{\lambda}{4}$ and impedance Z_mFigure 7 (Another Cascaded Line). At point A, the junction between the first line and the matchng section, we can find the normalized impedance as

$$\frac{Z_A}{Z_M} = \frac{Z_{02}}{Z_m} \tag{2}$$

Another Cascaded Line

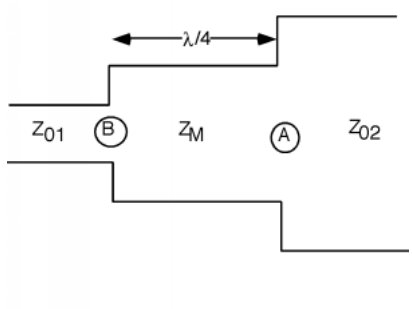

Figure 7

We take this impedence and rotate around on the Smith Chart $\frac{\lambda}{4}$ to find $\frac{Z_B}{Z_M}$

$$\frac{Z_B}{Z_M} = \frac{Z_m}{Z_{02}} \tag{3}$$

where we have taken advantage of the fact that when we go half way around the Smith Chart, the impedance we get is just the inverse of what we had originally (half way around turns $r(s)$ into $-r(s)$).

Thus

$$Z_B = \frac{{Z_m}^2}{Z_{02}} \tag{4}$$

If we want to have a match for line with impedence Z_{01}, then Z_B should equal Z_{01} and hence:

$$\begin{aligned} Z_B &= Z_{01} \\ &= \frac{{Z_m}^2}{Z_{02}} \end{aligned} \tag{5}$$

or

$$Z_m = \sqrt{Z_{01} Z_{02}} \tag{6}$$

This piece of line is called a **quarter wave matching section** and is a convenient way to connect two lines of different impedance.