Fast Convolution*

Douglas L. Jones

This work is produced by The Connexions Project and licensed under the
Creative Commons Attribution License †

Abstract

Efficient computation of convolution using FFTs.

1 Fast Circular Convolution

Since,

$$\sum_{m=0}^{N-1} x(m)\, h(n-m)\, mod N = y(n) \text{ is equivalent to} Y(k) = X(k)\, H(k)$$

$y(n)$ can be computed as $y(n) = \text{IDFT}\left[\text{DFT}\left[x(n)\right] \text{DFT}\left[h(n)\right]\right]$

Cost

- **Direct**
  - N^2 complex multiplies.
  - $N(N-1)$ complex adds.
- **Via FFTs**
  - 3 FFTs + N multipies.
  - $N + \frac{3N}{2}\log_2 N$ complex multiplies.
  - $3(N\log_2 N)$ complex adds.

If $H(k)$ can be precomputed, cost is only 2 FFts + N multiplies.

2 Fast Linear Convolution

DFT[1] produces cicular convolution. For linear convolution, we must zero-pad sequences so that circular wrap-around always wraps over zeros.

*Version 1.5: Jun 21, 2004 12:00 pm -0500

†http://creativecommons.org/licenses/by/1.0

[1] "Spectrum Analysis Using the Discrete Fourier Transform", (3) <http://cnx.org/content/m12032/latest/#DFTequation>

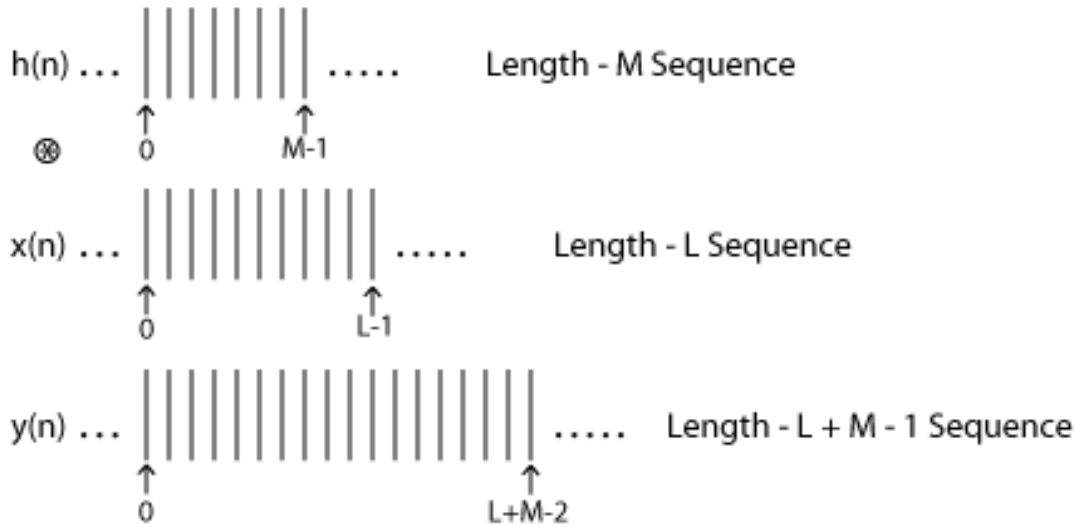

Figure 1

To achieve linear convolution using fast circular convolution, we must use zero-padded DFTs of length $N \geq L + M - 1$

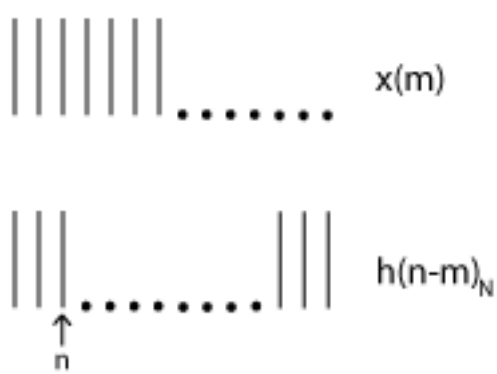

Figure 2

Choose shortest convenient N (usually smallest power-of-two greater than or equal to $L + M - 1$)

$$y(n) = \mathrm{IDFT}_N \left[\mathrm{DFT}_N \left[x(n)\right] \mathrm{DFT}_N \left[h(n)\right]\right]$$

NOTE: There is some inefficiency when compared to circular convolution due to longer zero-padded DFTs[2]. Still, $O\left(\frac{N}{\log_2 N}\right)$ savings over direct computation.

3 Running Convolution

Suppose $L = \infty$, as in a real time filter application, or $L \gg M$. There are efficient block methods for computing fast convolution.

3.1 Overlap-Save (OLS) Method

Note that if a length-M filter $h(n)$ is circularly convulved with a length-N segment of a signal $x(n)$,

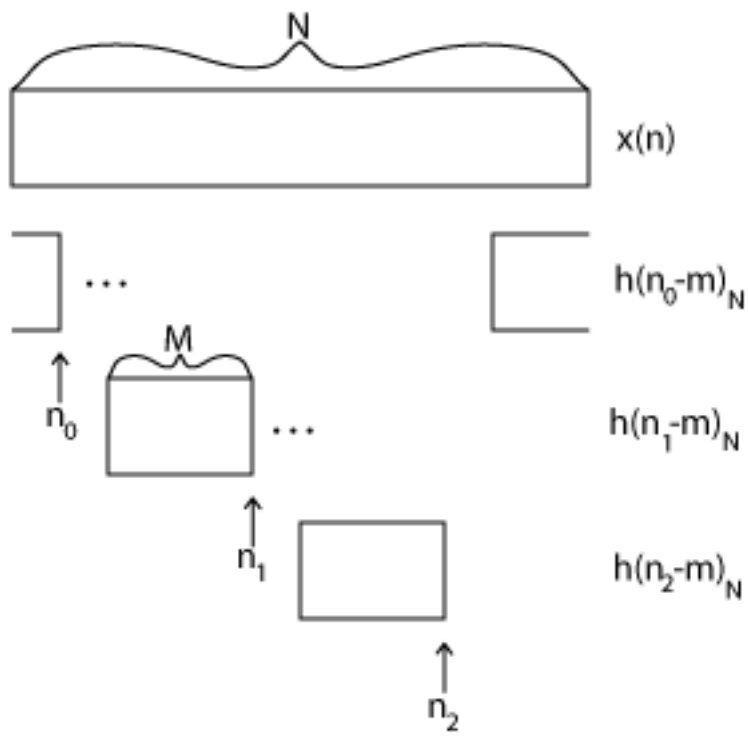

Figure 3

the first $M-1$ samples are wrapped around and thus is **incorrect**. However, for $M-1 \leq n \leq N-1$,the convolution is linear convolution, so these samples are correct. Thus $N-M+1$ good outputs are produced for each length-N circular convolution.

The Overlap-Save Method: Break long signal into successive blocks of N samples, each block overlapping the previous block by $M-1$ samples. Perform circular convolution of each block with filter $h(m)$. Discard first $M-1$ points in each output block, and concatenate the remaining points to create $y(n)$.

[2]"Spectrum Analysis Using the Discrete Fourier Transform", (3) <http://cnx.org/content/m12032/latest/#DFTequation>

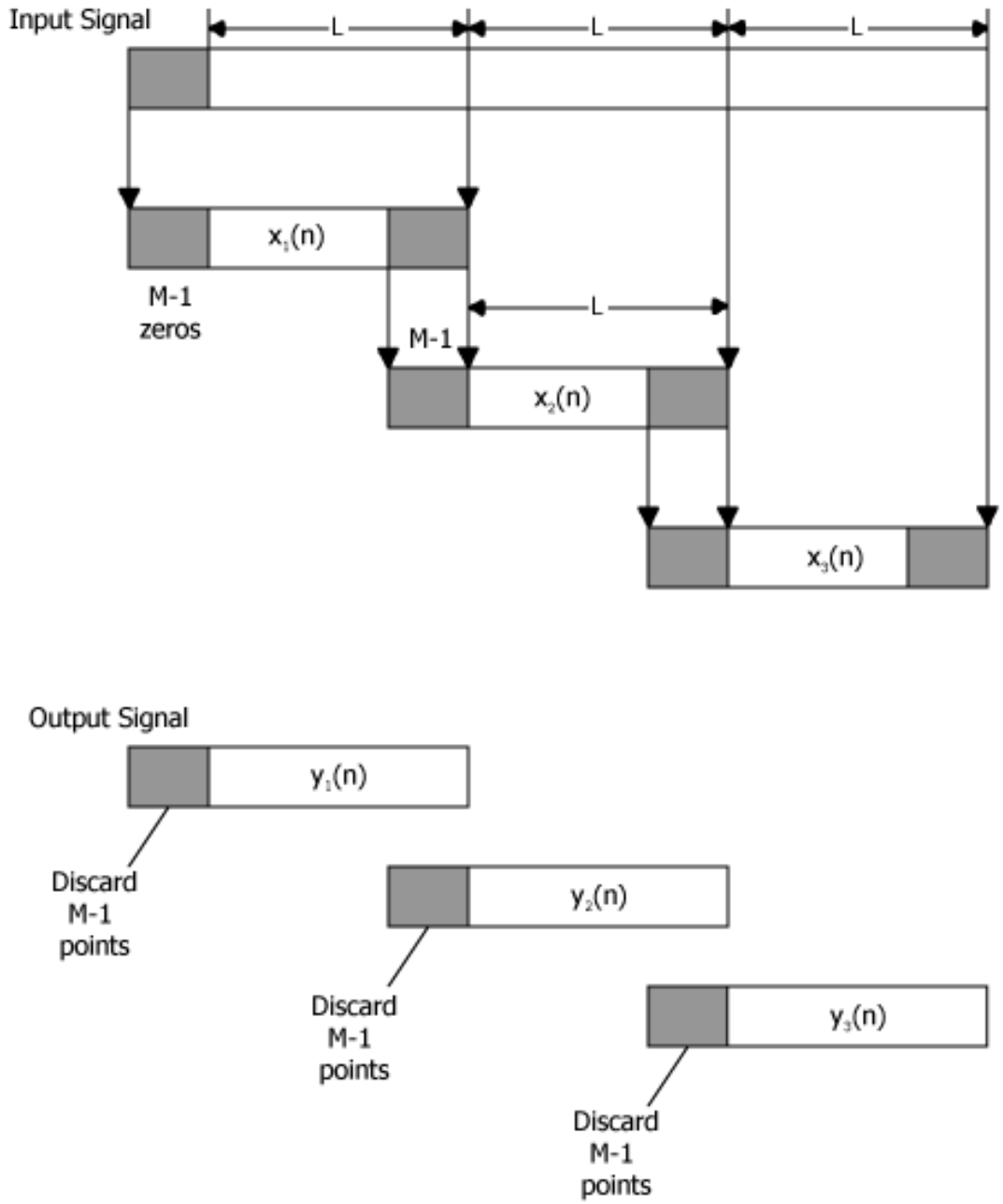

Figure 4

Computation cost for a length-N equals 2^n FFT per output sample is (assuming precomputed $H(k)$) 2 FFTs and N multiplies

$$\frac{2\left(\frac{N}{2}\log_2 N\right)+N}{N-M+1}=\frac{N\left(\log_2 N+1\right)}{N-M+1}\text{complex multiplies}$$

$$\frac{2\left(N\log_2 N\right)}{N-M+1}=\frac{2N\log_2 N}{N-M+1}\text{complex adds}$$

Compare to M mults, $M-1$ adds per output point for direct method. For a given M, optimal N can be determined by finding N minimizing operation counts. Usualy, optimal N is $4M \leq N_{\text{opt}} \leq 8M$.

3.2 Overlap-Add (OLA) Method

Zero-pad length-L blocks by $M-1$ samples.

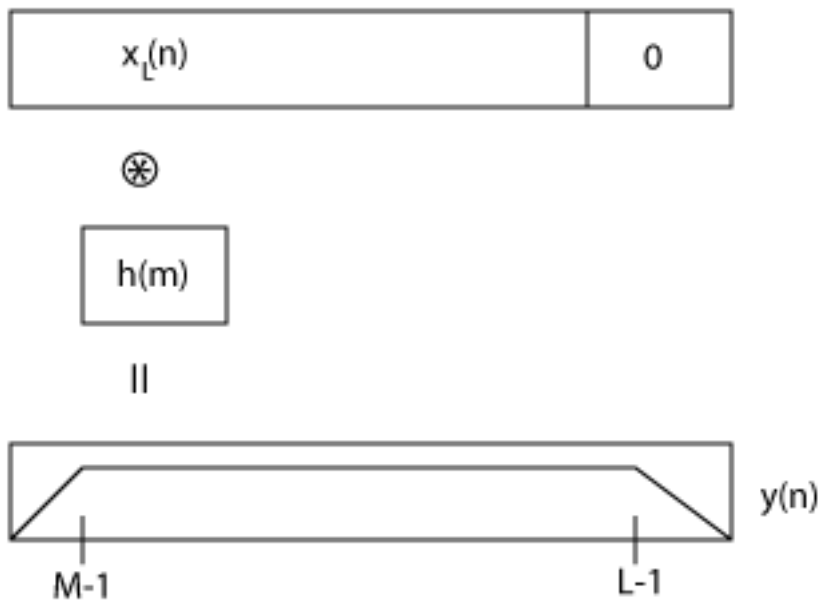

Figure 5

Add successive blocks, overlapped by $M-1$ samples, so that the tails sum to produce the complete linear convolution.

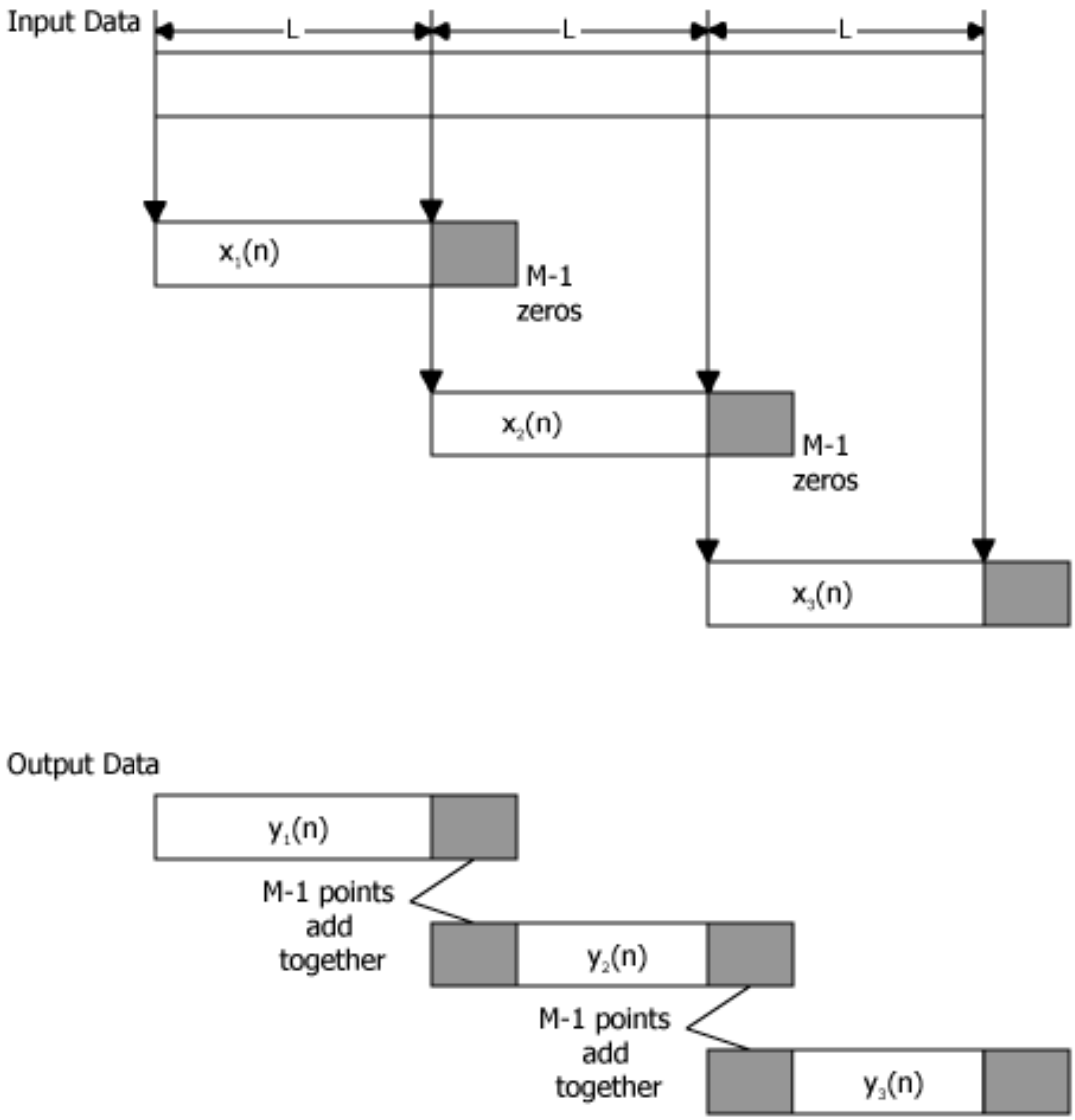

Figure 6

Computational Cost: Two length $N = L + M - 1$ FFTs and M mults and $M - 1$ adds per L output points; essentially the sames as OLS method.