Interactive Ball and Beam Experiment*

Erik Luther

This work is produced by OpenStax-CNX and licensed under the
Creative Commons Attribution License 2.0†

Abstract

The ball and beam experiment represents a simple second order system. This system is easily simulated using four states, but is more difficult to implement in real-life because not all necessary variables are easily observed. This simulation assumes all four states are easily observed and the system is linear throught the operating region. The plant model and the controller of the system are simulated in LabVIEW using the LabVIEW Simulation Module.

The ball and beam experiment is built with two moving parts, the ball and a beam, typically having a track so to limit the balls movement to one dimension along the beam. A motor is used to change the angle of the beam from the center. Both the angel of the beam and the position of the ball must be measured. The state space model utilizes all four states for control of the model. Those include the x position of the ball, the velocity of the ball, the angle of the bar and the angular velocity of the bar. The controller makes use of these values to derive an error signal used for feedback.

Download the source code for the Ball and Beam 3D Simulation[1] here. This VI was created in LabVIEW 8.2 using the 3D Picture Control Toolit add-on which is not a supported feature.[2]

NEW: If you find value in this 3D demo, please take some time to build on my work by updating it to support the new supported 3D Picture Control tool now shipping within LabVIEW. Then post it to Connexions!

*Version 1.8: Apr 1, 2009 11:07 am -0500

†http://creativecommons.org/licenses/by/2.0/

[1]See the file at <http://cnx.org/content/m14028/latest/Ball-Beam.llb>

[2]See the file at <http://cnx.org/content/m14028/latest/http://zone.ni.com/devzone/cda/tut/p/id/4411>

Interactive Ball and Beam Experiment

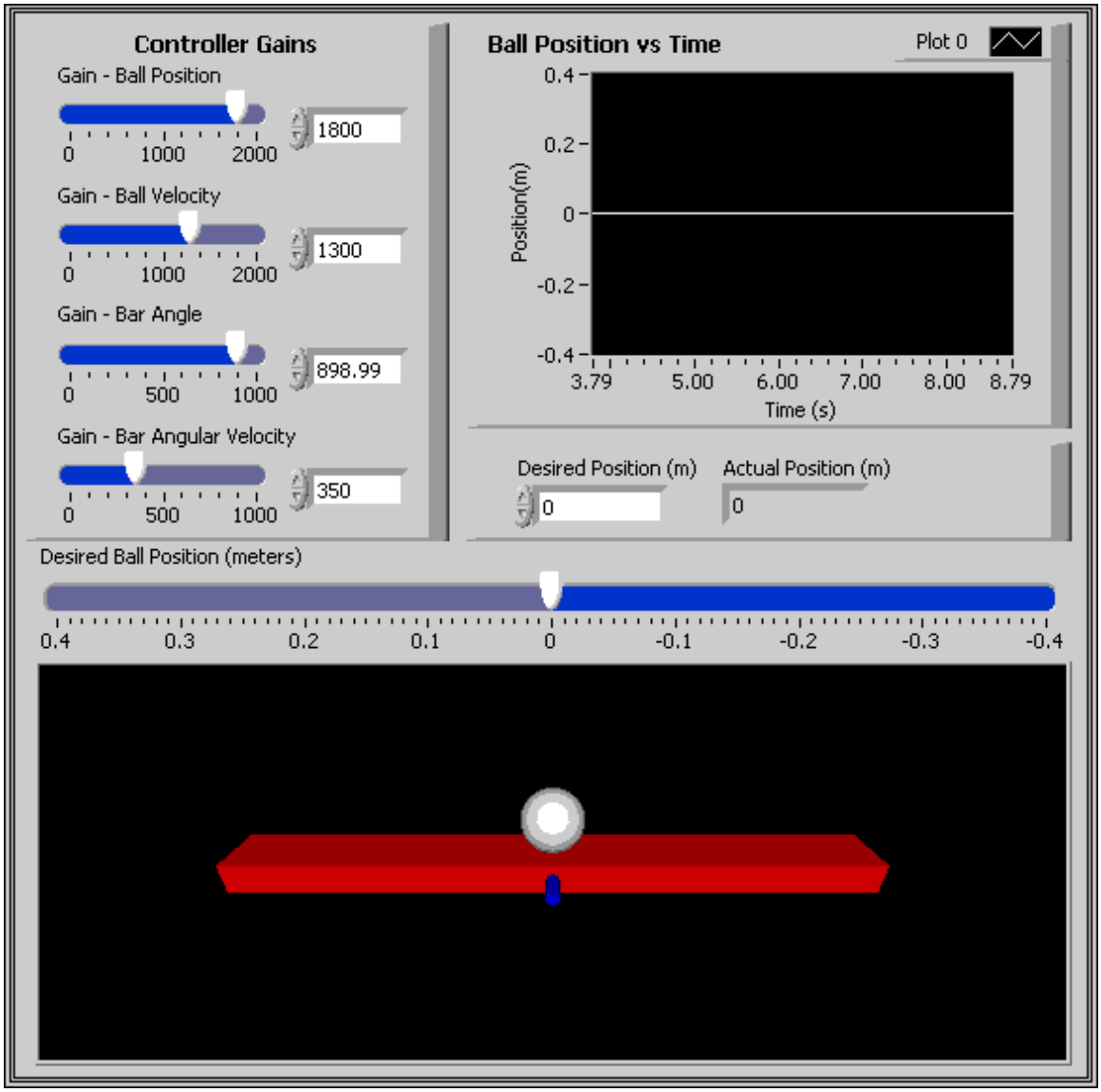

Figure 1: LabVIEW Interactive Ball and Beam Experiment

The Ball and Beam source code can be downloaded here: Ball and Beam Simulation VI[3]

[3]See the file at <http://cnx.org/content/m14028/latest/Ball-Beam.llb>

Ball and Beam VI Block Diagram

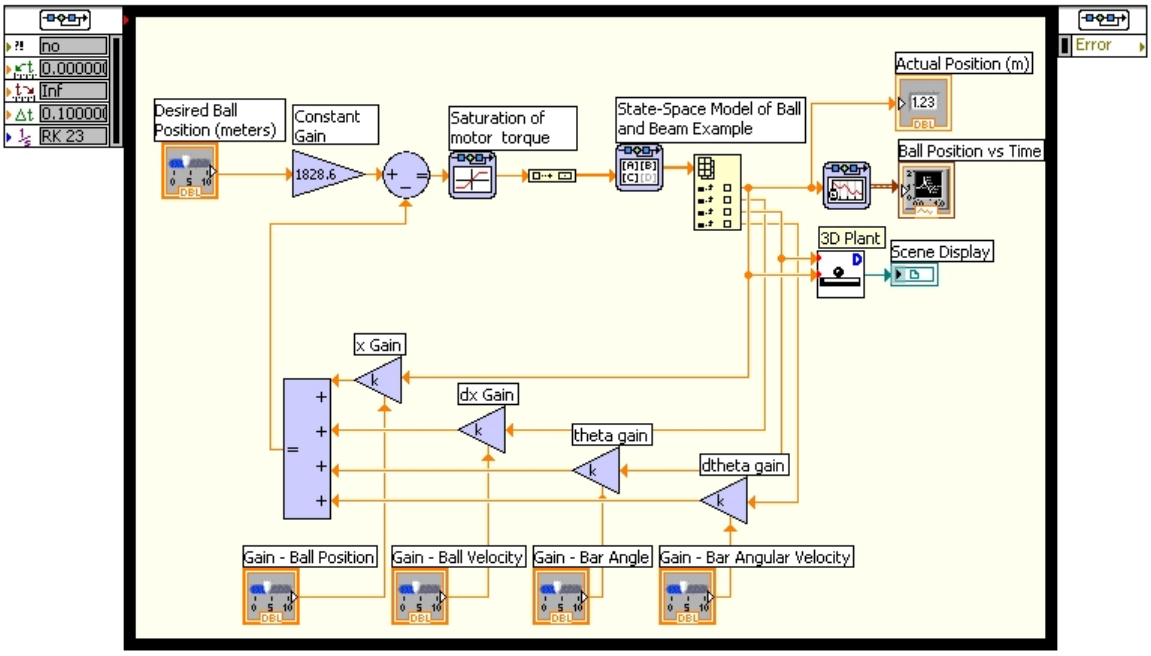

Figure 2: This LabVIEW VI utilizes the LabVIEW Simulation module to simulate the controller effects on the Ball and Beam plant model.

This VI was created with LabVIEW 8.20 and the LabVIEW Simulation Module 8.20.

Reference: Solution to the Ball and Beam Problem Using the State-space Design Method[4] by William C. Messner, Carnegie Mellon University and Dawn Tilbury, University of Michigan

[4] http://www.engin.umich.edu/group/ctm/examples/ball/bbSS.html