Free body diagram (application)*

Sunil Kumar Singh

This work is produced by The Connexions Project and licensed under the
Creative Commons Attribution License †

Abstract

Solving problems is an essential part of the understanding process.

Questions and their answers are presented here in the module text format as if it were an extension of the treatment of the topic. The idea is to provide a verbose explanation, detailing the application of theory. Solution presented is, therefore, treated as the part of the understanding process – not merely a Q/A session. The emphasis is to enforce ideas and concepts, which can not be completely absorbed unless they are put to real time situation.

1 Representative problems and their solutions

We discuss problems, which highlight certain aspects of the study leading to the Free body diagram (FBD). The questions are categorized in terms of the characterizing features of the subject matter :

- Vertically Staked blocks
- Block, string and pulley
- Block, spring and incline
- Hinged rod
- Rod and spherical shell

2 Vertically Staked blocks

Example 1

Problem : Draw free body diagram of three blocks placed one over other as shown in the figure.

*Version 1.7: Nov 21, 2008 6:32 pm -0600

†http://creativecommons.org/licenses/by/2.0/

Vertically Staked blocks

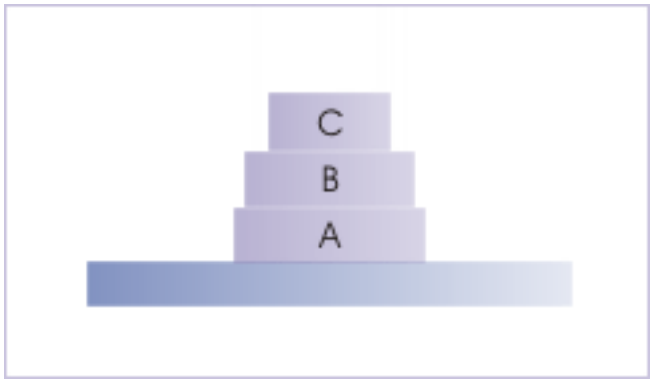

Figure 1: Three blocks of different masses are placed one over other on a horizontal surface.

Solution : We start drawing FBD of the topmost block as we do no need to consider normal force due to an overlying body as the case with other blocks.

Forces on the blocks

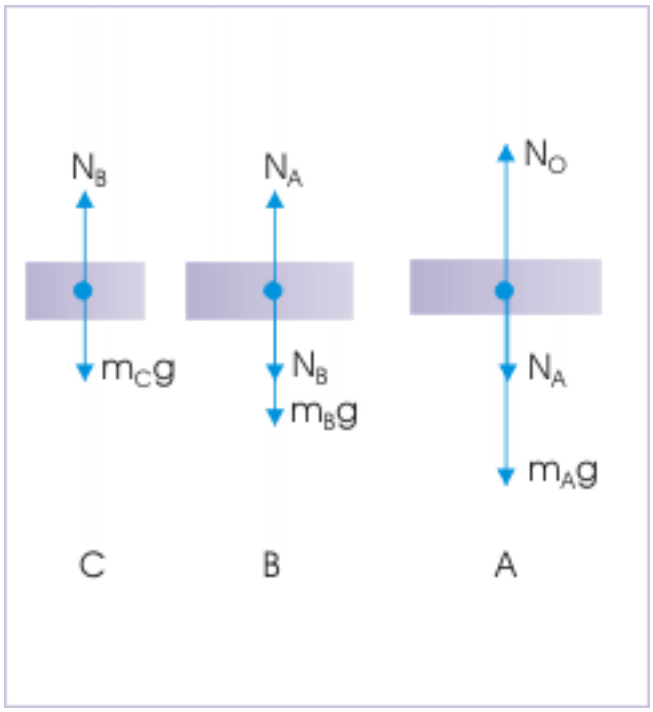

Figure 2: The forces on the individual elements of the system are shown.

The forces on the block "C" are :

1. $W_C = m_C g =$ its weight, acting downward
2. $N_B =$ normal reaction on "C" due to the upper surface of block B, acting upward

The forces on the block "B" are :

1. $W_B = m_B g =$ its weight, acting downward
2. $N_B =$ normal reaction on "B" due to the lower surface of block C, acting downward
3. $N_A =$ normal reaction on "B" due to the upper surface of block A, acting upward

The forces on the block "A" are :

1. $W_A = m_A g =$ its weight, acting downward
2. $N_A =$ normal reaction on "A" due to the lower surface of block B, acting downward
3. $N_O =$ normal reaction on "A" due to horizontal surface, acting upward

The FBD of the blocks as points with external forces are shown here. Note that motion is not involved. Hence, no information about acceleration is given in the drawing.

Free body diagram

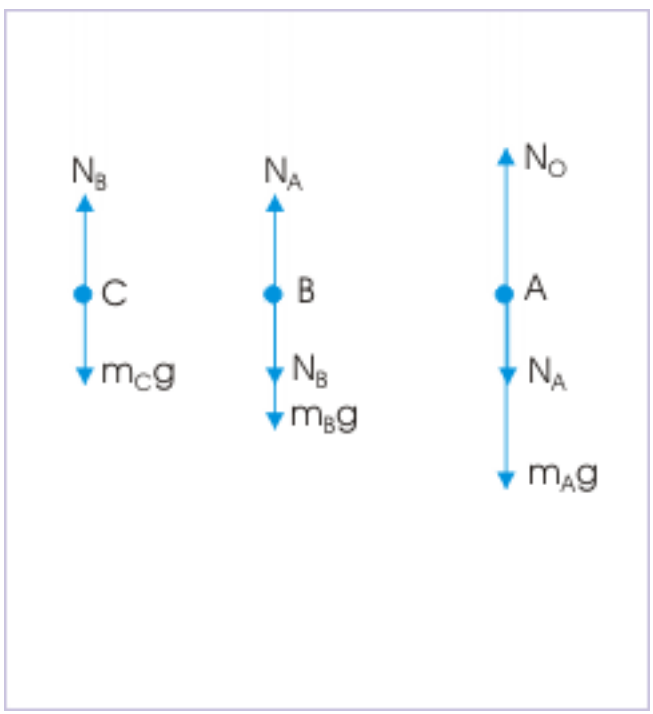

Figure 3: The elements are shown as point with forces.

We have deliberately not shown the coordinate system which may be selected, keeping in mind the inputs available. In this instant case, however, a vertical axis is clearly the only choice.

3 Block, string and pulley

Example 2

Problem : Three blocks are connected with the help of two “mass-less” strings and a “mass-less” pulley as shown in the figure. If there is no friction involved and strings are taught, then draw free body diagram of each of the blocks.

Three blocks connected with two strings

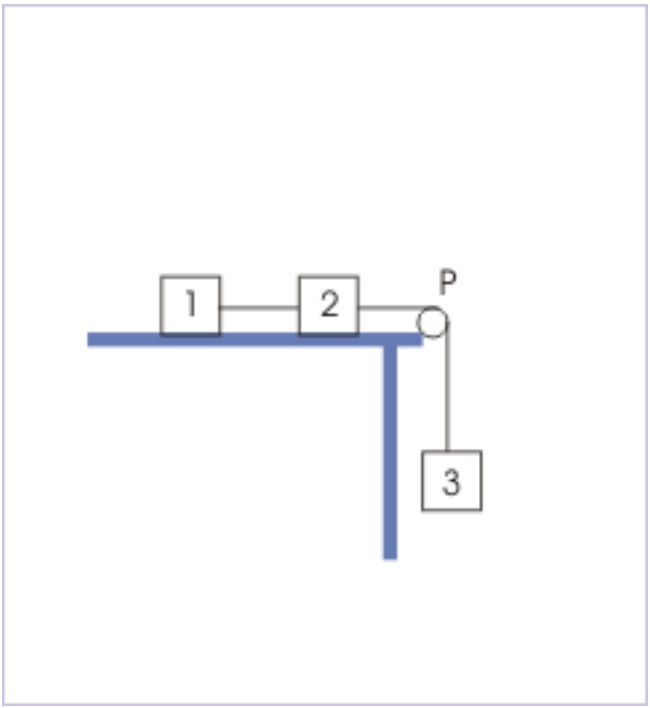

Figure 4: Three blocks are connected through two "mass-less" strings and one "mass-less" pulley.

Solution : Since there are two separate strings. Tensions in two strings are different. We see here that block -1 has no attachment to its left. Hence, it would involve minimum numbers of forces. Thus, we start from block -1.

Forces on the blocks

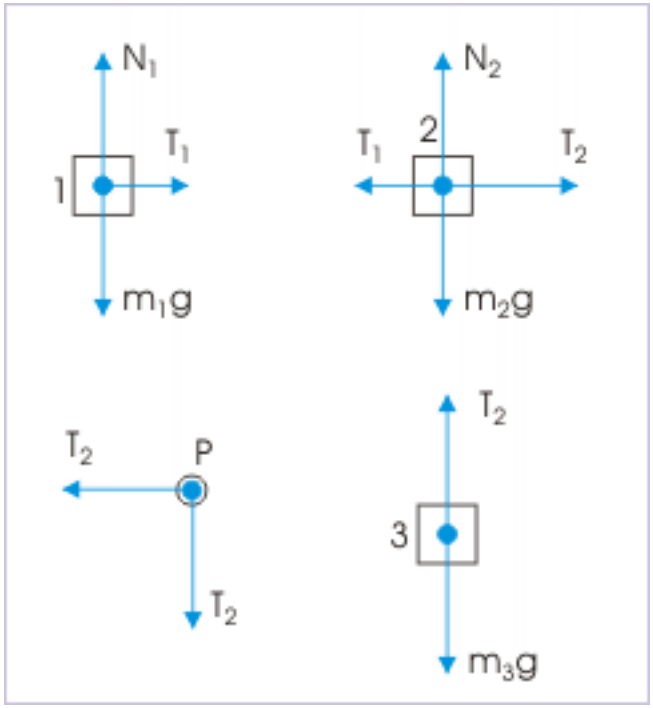

Figure 5: The forces on the individual elements of the system are shown.

The forces on the block – 1 are :

1. $W_1 = m_1 g =$ its weight, acting downward
2. $N_1 =$ normal force on block – 1 due to the surface of table, acting upward
3. $T_1 =$ tension in the string, towards right

The forces on the block – 2 are :

1. $W_2 = m_2 g =$ its weight, acting downward
2. $N_2 =$ normal force on block – 2 due to the surface of table, acting upward
3. $T_1 =$ tension in the string, towards left
4. $T_2 =$ tension in the string, towards right

We note here that "mass-less" string passes over a "mass-less" pulley and no friction is involved. As such, the tensions in the string on either side of the pulley are equal.

The forces on the block – 3 are :

1. $W_3 = m_3 g =$ its weight, acting downward
2. $T_2 =$ tension in the string, acting upward

Since strings are taught, it is evident that the acceleration of the blocks and string are same. Also, we note that motion of the blocks on the table is in horizontal direction only. There is no motion in vertical direction. The forces in the vertical direction, therefore, constitute a balanced force system. Thus, for the analysis of motion, the consideration of forces in vertical directions for

blocks of masses " m_1 " and " m_2" is redundant and can be simply ignored. Now, taking these two considerations in account, the FBD of the blocks are as shown here :

Free body diagram

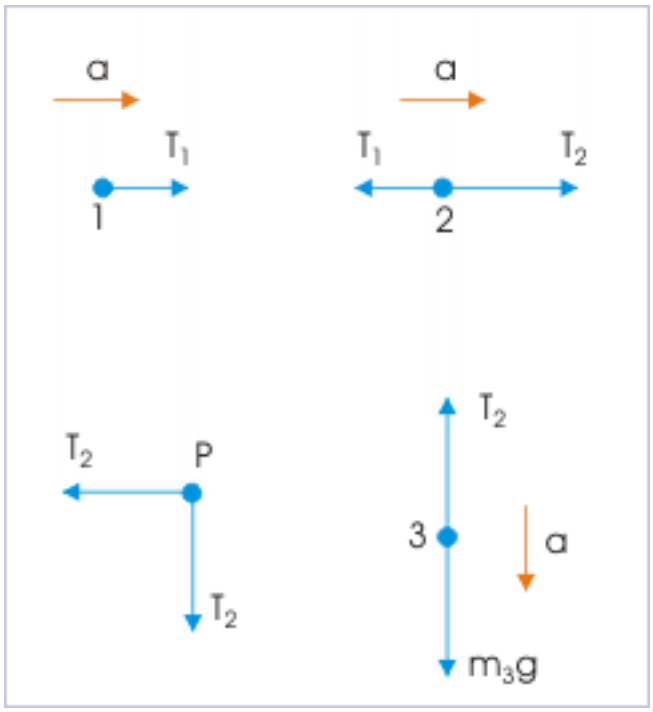

Figure 6: The elements are shown as point with forces.

We should note that the FBD of the blocks show acceleration. Idea here is that we should supplement FBD with as much information as is available. However, we have deliberately not shown the coordinate system which may be selected, keeping in mind the inputs available.

Example 3

Problem : Draw free body diagrams of two blocks "A" and "B" in the arrangement shown in the figure, where Block "B" is lying on a smooth horizontal plane.

Two blocks

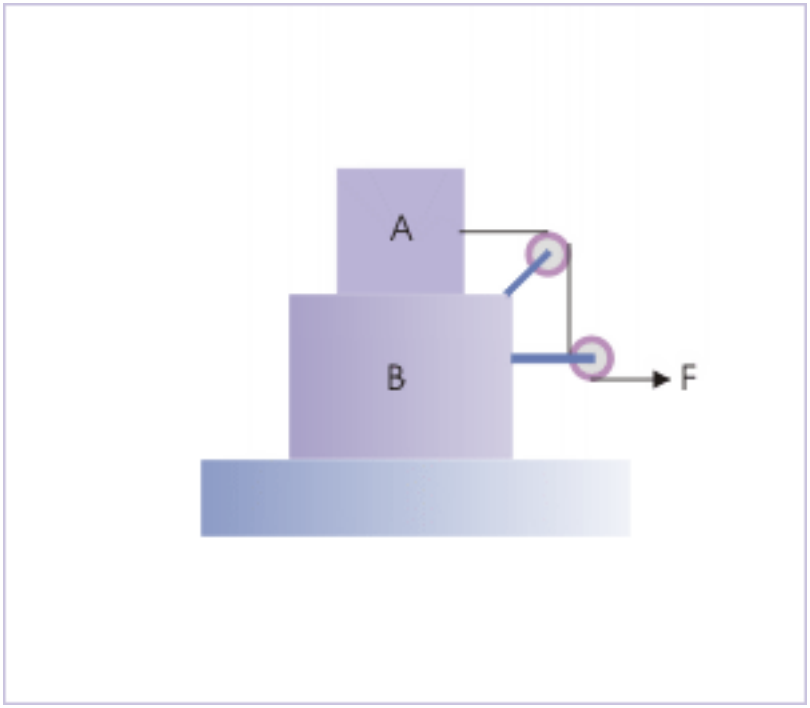

Figure 7: A force "F" is applied with string and pulley arrangement.

Solution : Drawing FBD is a methodological process. However, its efficient use is intuitive and sometimes experience based.

This problem highlights these aspects of drawing FBD. The figure below gives the sketch of various forces on each of the blocks. Note specially that there are indeed large numbers of forces on block "B".

Two blocks

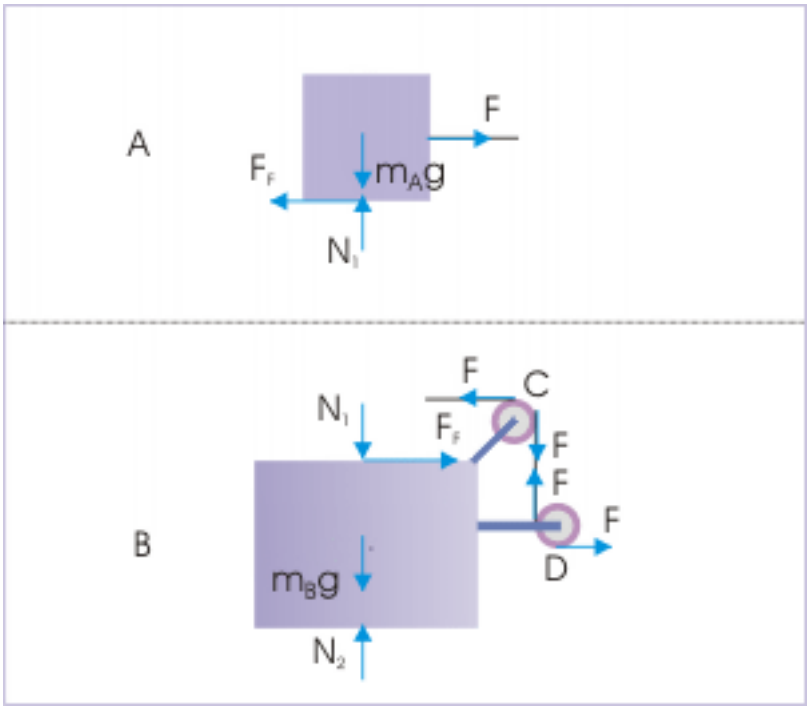

Figure 8: Forces on the two blocks.

The FBD of each of the blocks are shown assuming that only translation is involved. The forces are, therefore, shown concurrent at a single point in each case.

Free body diagrams

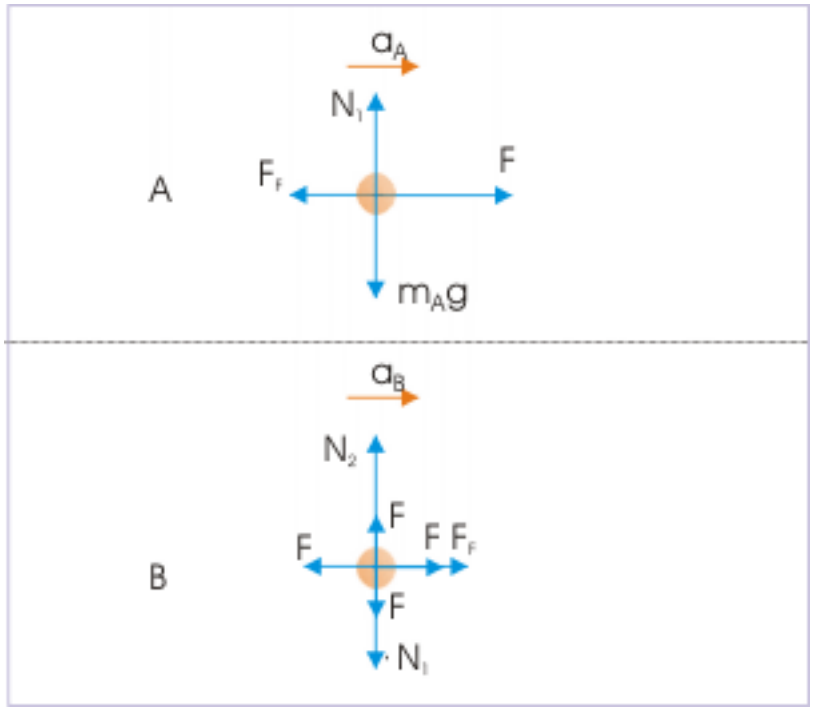

Figure 9: Forces on the two blocks are shown concurrent.

If we look closely at the forces on the block "B", then we realize that tension in the string is equal to external force "F". These tensions act on the block "B" through two attached pulleys. Knowing that tension in the string is same everywhere, we could have neglected all the four tensions as far as block "B" is concerned. They form two pairs of equal and opposite forces and, therefore, tensions form a balanced force system for block "B".

We could have further simplified drawing of FBD in the first attempt. We are required to consider only translation in horizontal direction. The forces in vertical direction on block "B", as a matter of fact, may not be required for the force analysis in horizontal direction. We will learn subsequently that we can determine friction in this case by considering vertical normal force only on block "A". Thus, we can simplify drawing FBD a lot, if we have lots of experience in analyzing forces.

Free body diagrams

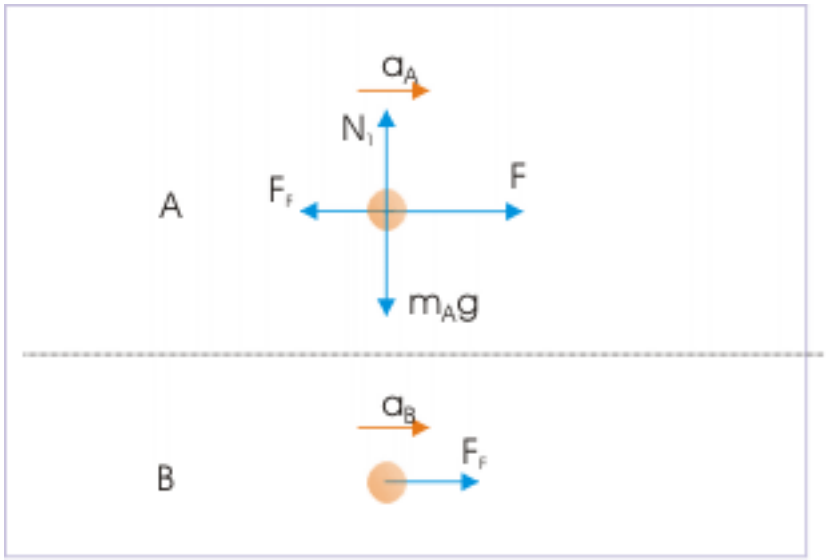

Figure 10: Abridged version of free body diagram.

4 Block, spring and incline

Example 4

Problem : A block of mass "m" is held with the support of a spring of constant "k" on a rough incline of angle "θ". Draw the free body diagram (FBD) of the block.

A block on an incline

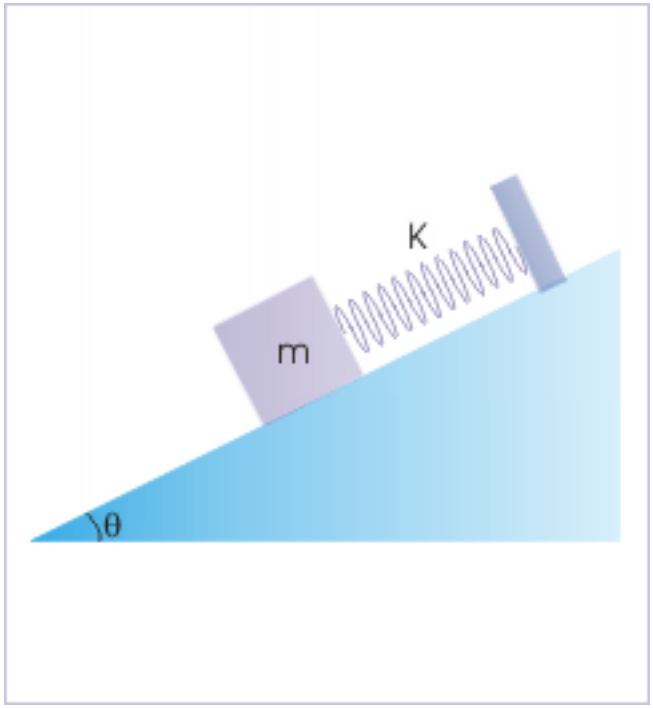

Figure 11: A block of mass "m" is held with the support of a spring of constant "k" on a rough incline of angle "θ".

Solution : The external forces on the block are :

1. Weight of the block
2. Normal force due to incline
3. Friction force
4. Spring force

The forces are drawn from the points of respective applications. Note specially that forces are not concurrent.

Forces on the blocks

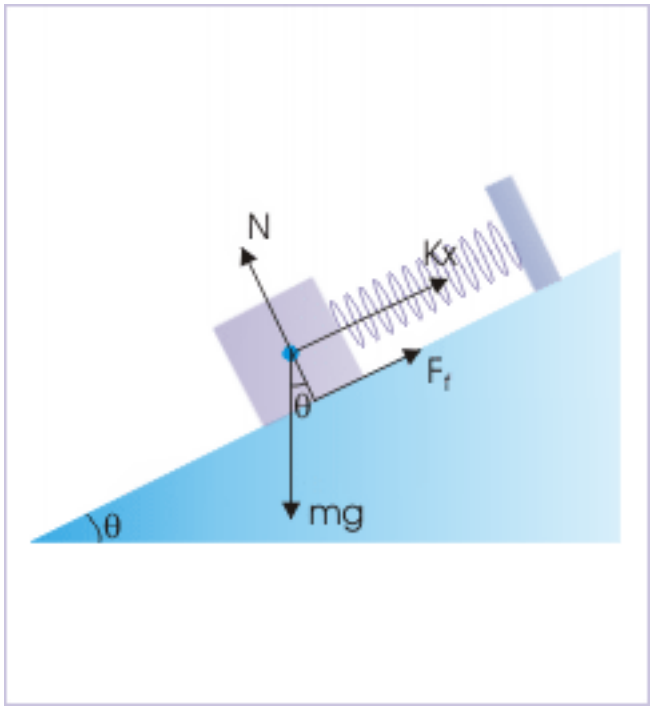

Figure 12: The forces on the block are shown.

As there is no rotation involved, we consider forces to be concurrent and represent them as such with a common point.

The FBD of the block as point object is shown here :

Free body diagram

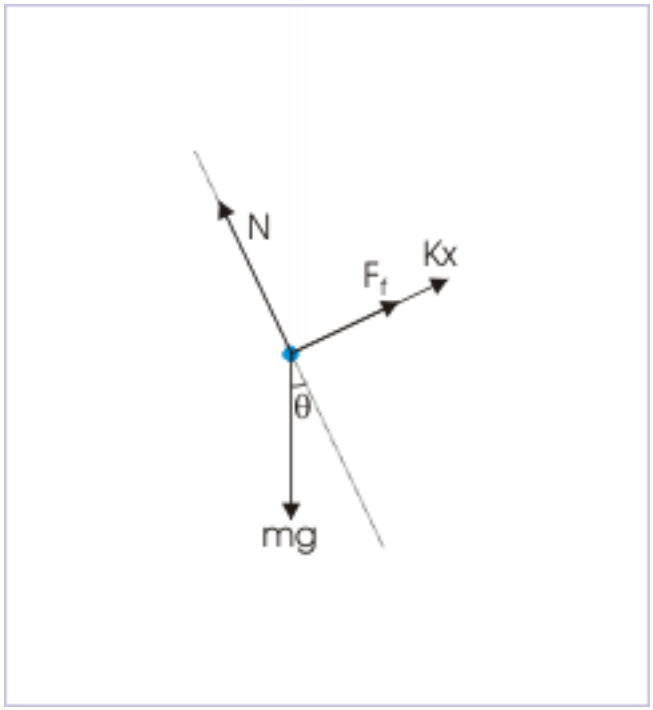

Figure 13: The block is shown as point with external forces on it.

We have indicated the angle that normal force makes with the direction of perpendicular to the incline. Idea here is that we should supplement FBD with as much information as is available. We have deliberately not shown the coordinate system which may be selected, keeping in mind the inputs available.

5 Hinged rod

Example 5

Problem : A rod "AB" is hinged at "A" from a wall and is held with the help of a string as shown in the figure. Draw the free body diagram (FBD) of the rod.

A hinged rod

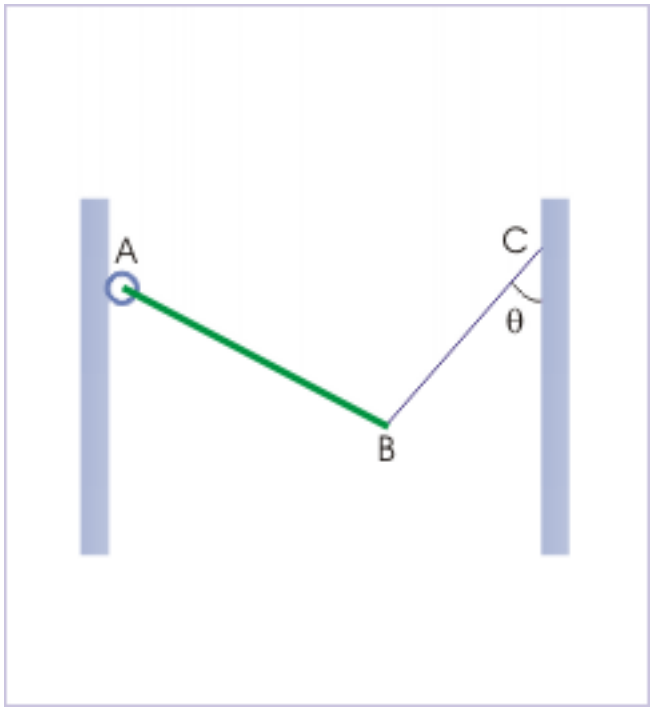

Figure 14: The rod is hinged from a wall and is held with the help of a string .

Solution : This example is designed to highlight the characteristics of a hinge. A hinge changes the nature of contact force at the contact between two objects. The direction of contact forces are not predefined like in the normal case, but can assume any direction depending on the other forces acting on the body under consideration.

As a consequence, the contact force is represented by a unknown force "F". In the case of coplanar force system, this unknown force can, in turn, be represented by a pair of components in "x" and "y" directions. The figure below shows the forces acting on the rod "AB".

Forces on the rod

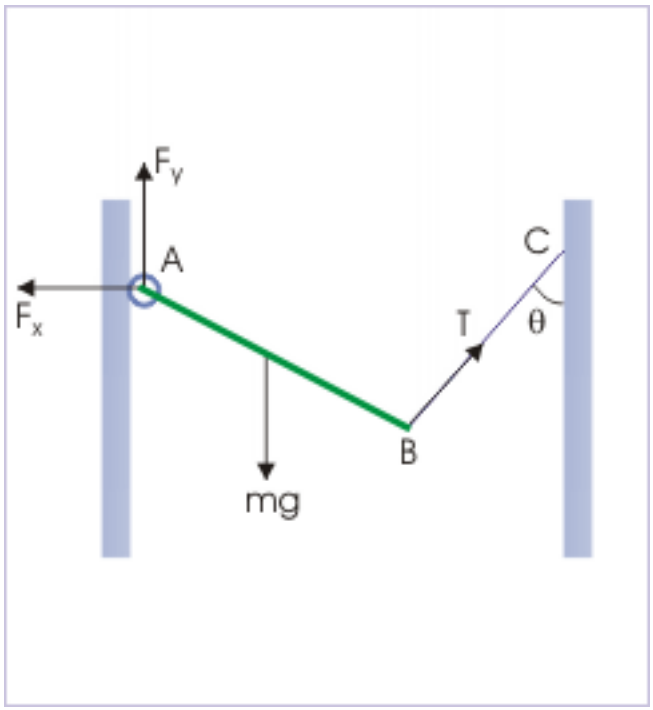

Figure 15: The forces on the rod are shown.

The FBD of the rod after removing other elements of the system is shown here :

Free body diagram

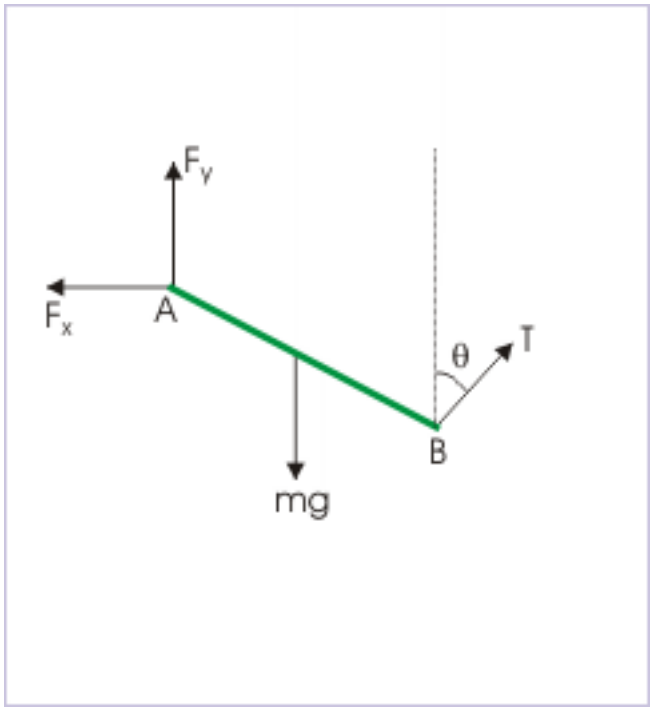

Figure 16: The rod is shown with external forces on it.

We should note that the FBD of the rod shows the angle that the tension force makes with the vertical. Idea here is that we should supplement FBD of the rod with as much information as is available. Also, we should note that we have not reduced the rod to a point as earlier to emphasize the lateral placements of forces on the rod. As a result, the rod may involve tendencies for both translation and rotation. If only translational is involved, we can treat rod as point with its center of mass.

We have considered horizontal and vertical directions as "x" and "y" directions for denoting unknown force components " F_x " and " F_y ".

6 Rod and spherical shell

Example 6

Problem : A rod AB is placed inside a spherical shell, whose inside surface is rough. Draw the free body diagram (FBD) of the rod.

A rod placed inside a spherical shell

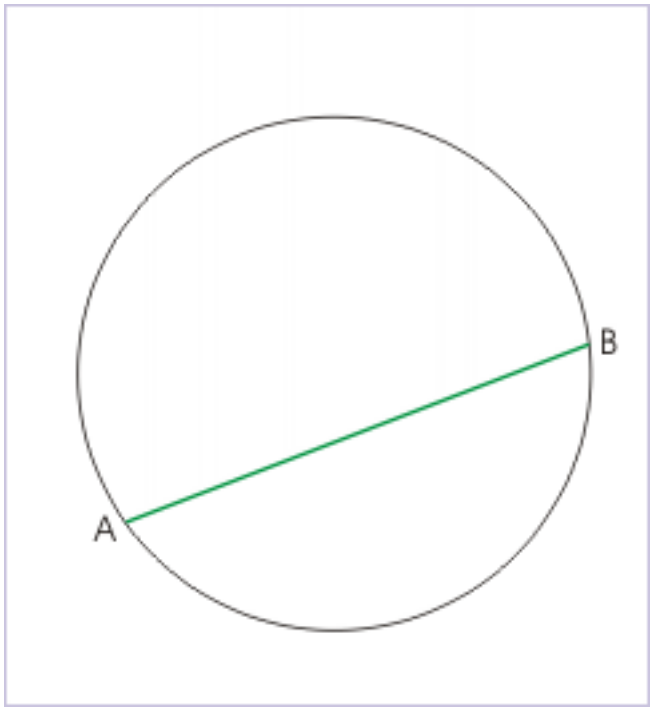

Figure 17: The rod is placed inside a spherical shell, whose inside surface is rough.

Solution : We note that inside surface of the spherical shell is rough. It means that there will be friction between spherical shall and the rod. Thus, there are three forces operating on the rod : (i) weight of rod (ii) normal force between rod and spherical shell and (iii) friction force between rod and spherical shell. Since the rod is in contact at two end points, contact forces operate at both these end points.

Forces on the rod

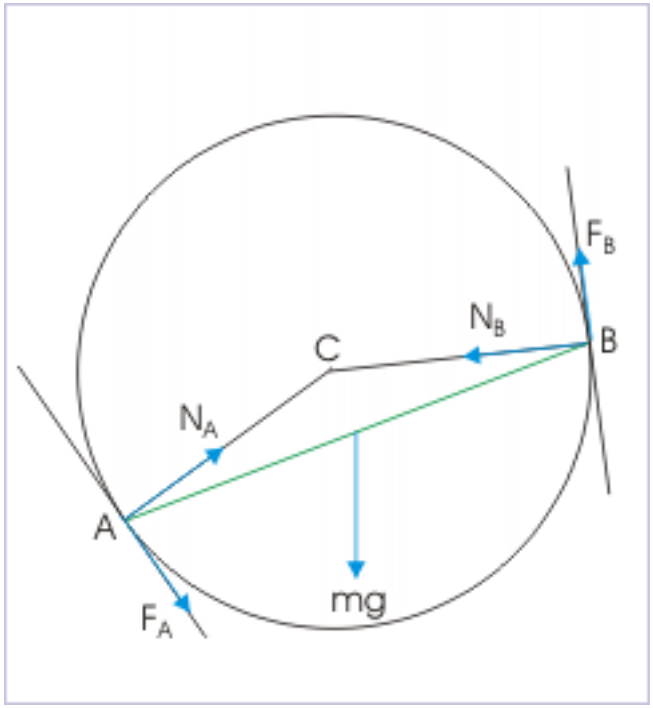

Figure 18: The forces on the rod are shown.

The normal forces are perpendicular to the tangents drawn at "A" and "B". As such, normal forces at these points, when extended meet at the center of the spherical shell. The friction force at the contact surface is along the tangent drawn.

Here we see that weight is shifted laterally towards "B". Considering rod has a downward tendency at "B", the friction is shown in the upward direction at "B" and downward direction at "A". The FBD of the rod after removing other elements of the system is shown here.

Free body diagram

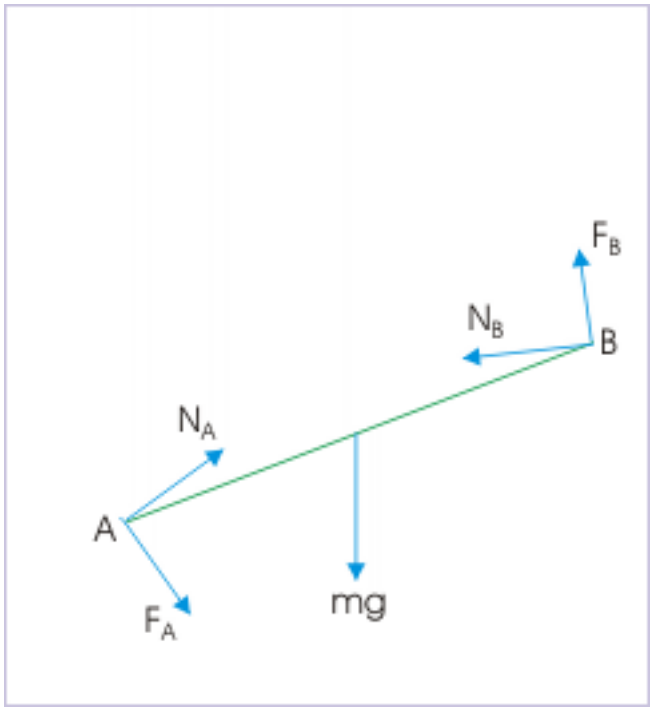

Figure 19: The rod is shown with external forces on it.

We have deliberately not shown the coordinate system which may be selected, keeping in mind the inputs available. Also, we have not reduced the rod as point as the rod may undergo both translational and rotational motion. As such, lateral placements of forces along the rod are shown with FBD.