AE_Lecture 5_Part C_continued_Simulated Frequency Domain Study of CB,CE,Emitter Degenerate Amplifier and CC Amplifier.*

Bijay_Kumar Sharma

Abstract

AE_lecture 5_PartC_continuation is the simulated study of CE Amplifier, Emitter degenerate Amplifier, CB Amplifier and CC Amplifier. The results corroborated the experimental values.

AE_Lecture 5_Part C_continued_Simulated Frequency Domain Study of CB,CE,Emitter Degenerate Amplifier and CC Amplifier.

In this Lecture , we carry out the frequency domain studies of Common Base, Common Emitter, Emitter Degenerate Amplifier and Common Collector Amplifier. These studies had been carried in Laboratory also. We find that the frequency response Band Width of the two studies have a remarkable correspondence. The simulation has been carried out using Multisim Simulation Software marketed by National Instruments.

*Version 1.1: Mar 15, 2010 10:11 am -0500

†http://creativecommons.org/licenses/by/3.0/

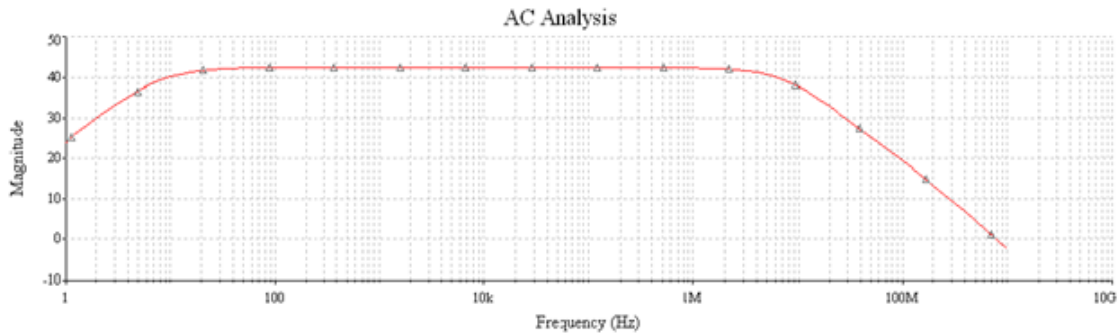

Figure 1. Gain Magnitude Frequency Response Curve of CE Amplifier.
y-axis: Gain Magnitude in dB;
x-axis: Frequency Plot in logrithmic Scale;

Figure 1

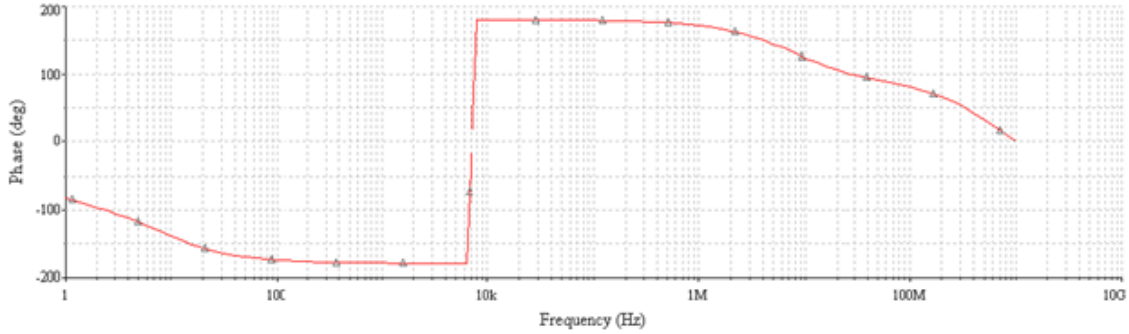

Figure 1.b. Phase of Gain vs Frequency of CE Amplifier.
y-axis: Phase of Gain in dB;
x-axis: Frequency plot on logrithmic scale.

Figure 2

Common Emitter Circuit Schematics is given in Figure 1c. The Gain Magnitude Plot and Gain Phase plot are given in Figure 1 and 1b.

By inspecting Figure 1 we find a Band-width of 5Mhz. The midband gain is 43dB and -3dB frequencies are i.e. 40dB frequencies are 10Hz and 5Mhz.

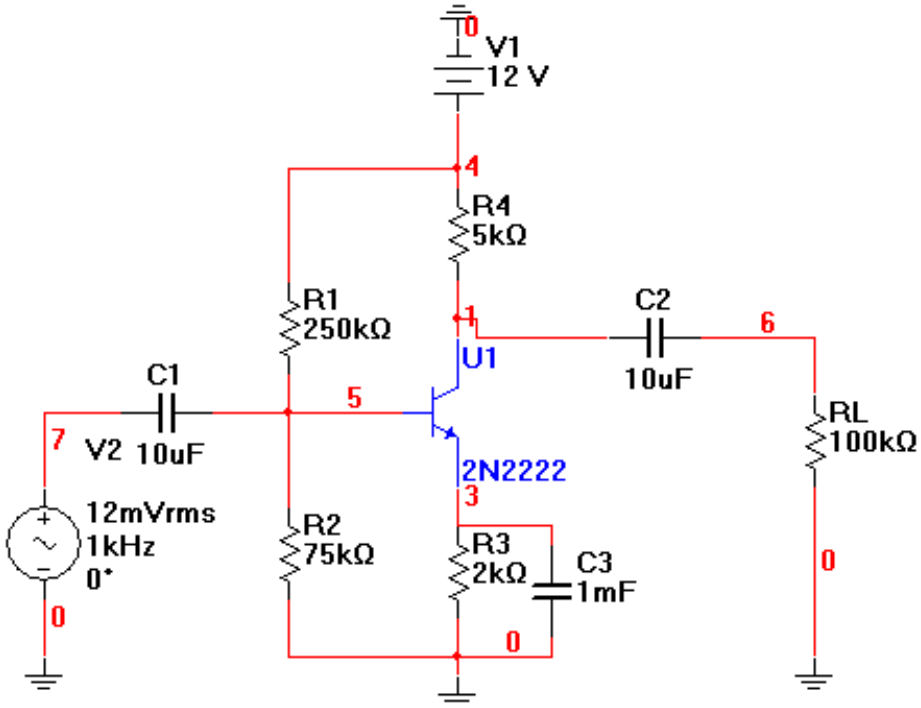

Figure 1.c. Circuit Schematics of CE Amplifier.

Figure 3

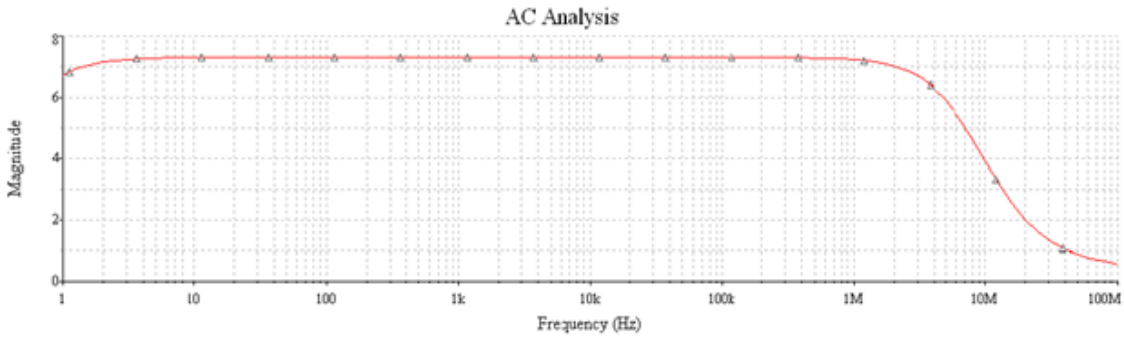

Figure 2. Gain Magnitude Frequency Response Curve of Emitter Degenerate Amplifier.
y-axis: Gain Magnitude in dB;
x-axis: logrithmic frequency plot in Hz;

Figure 4

Emitter Degenerate Circuit Schematics is given in Figure 2c. The Gain Magnitude Plot and Gain Phase plot are given in Figure 2 and 2b.

By inspecting Figure 2 we find a Band-width of 10Mhz. The midband gain is 7dB and -3dB frequencies are i.e. 4dB frequencies are (less than 1Hz) and 10Mhz.

Emitter Degenerate Amplifier is a negative feedback amplifier with current-series feedback. The improvement is little less than 2× .

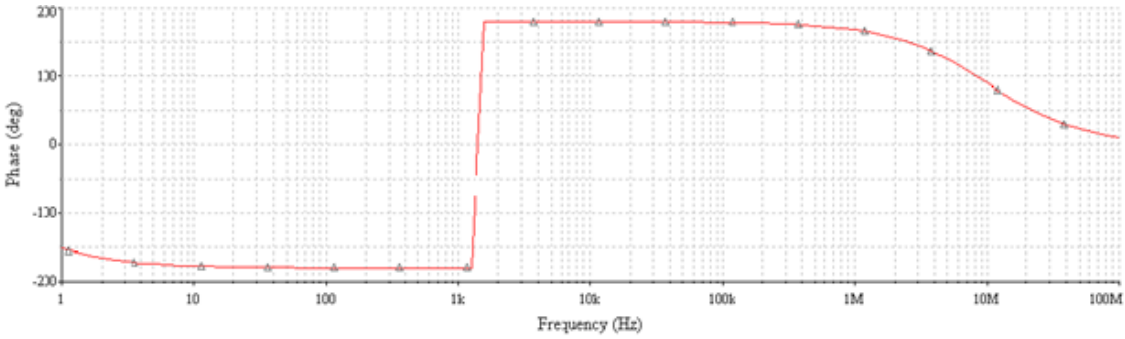

Figure 2b. Phase of the Gain of Emitter Degenerate Amplifier vs Frequency Response Curve.
y-axis:Phase of Gain in degrees;
x-axis: logrithmic plot of frequency in Hz;

Figure 5

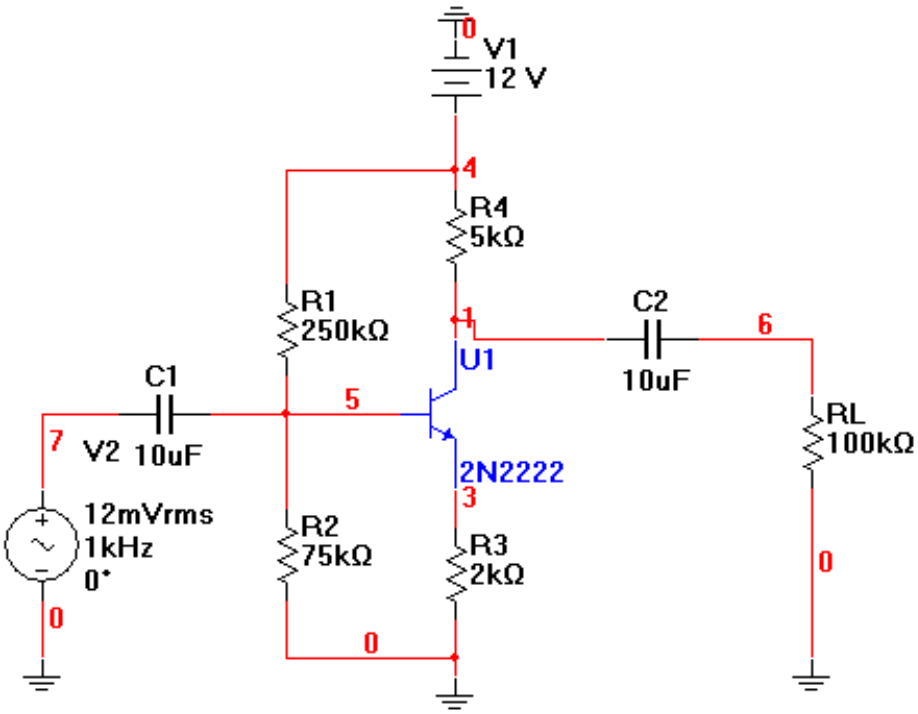

Figure 2.c.Circuit Schematics of Emitter Degenerate Ampl.

Figure 6

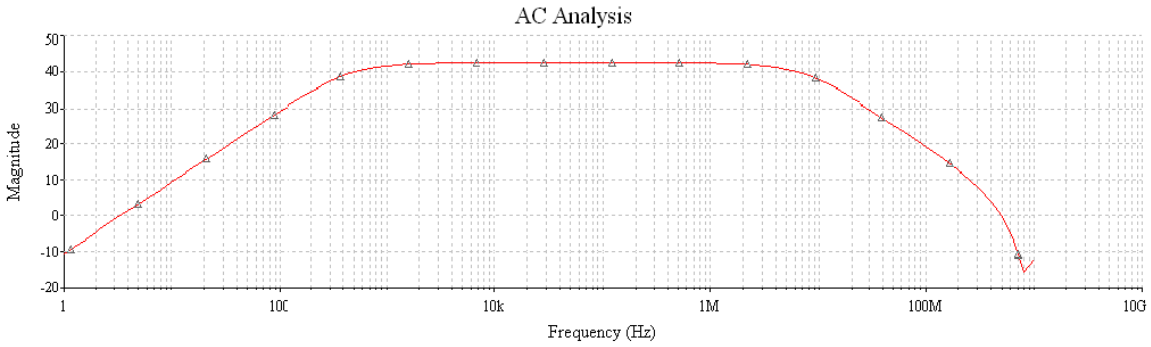

Figure 3. Gain Magnitude Frequency Response Curve of CB Amplifier
y-axise: Gain Magnitude in dB; x-axis: Frequency Plot on logrithmic scale;

Figure 7

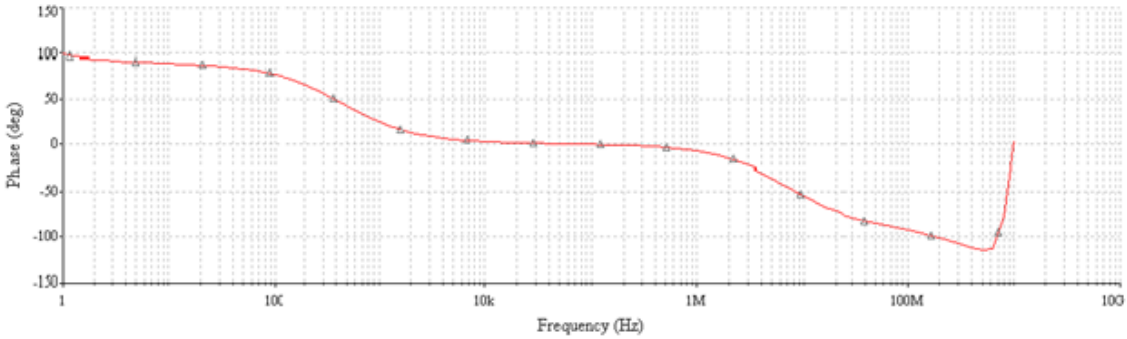

Figure 3.b. Phase of Gain vs frequency plot of CB Amplifier.
y-axis: Phase of Gain in degrees; x-axis: frequency plot on logrithmic scale.

Figure 8

Common Base Circuit Schematics is given in Figure 3c. The Gain Magnitude Plot and Gain Phase plot are given in Figure 3 and 3b.

By inspecting Figure 3 we find a Band-width of 5Mhz. The midband gain is 43dB and -3dB frequencies are i.e. 40dB frequencies are 500Hz and 5Mhz.

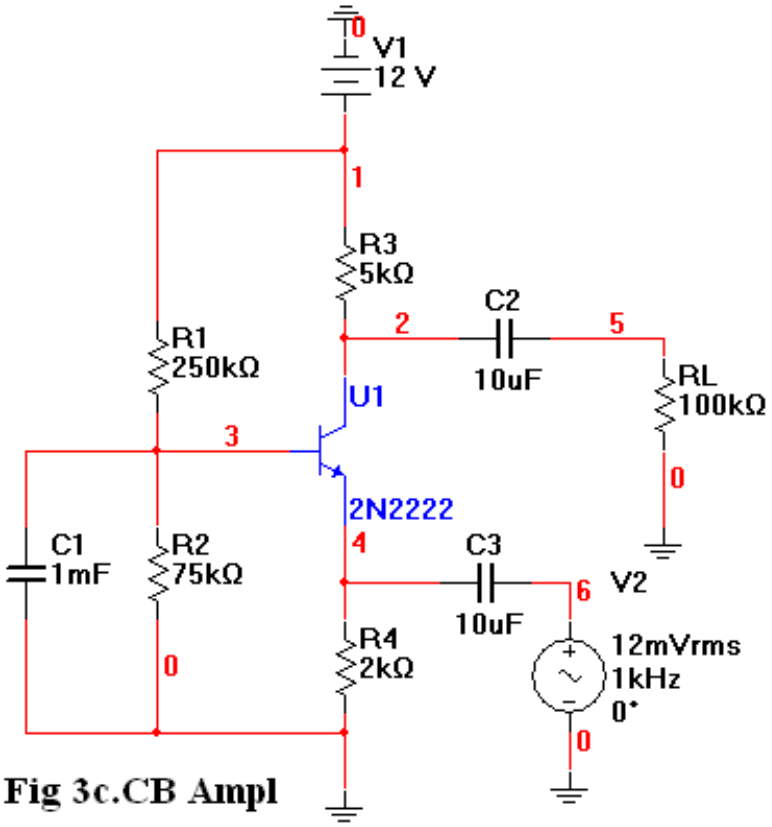
0
V1
12 V
1
R3
5kΩ
C2
2
5
10uF
R1
250kΩ
U1
RL
100kΩ
3
0
2N2222
C1
1mF
R2
75kΩ
4
C3
6
V2
10uF
R4
2kΩ
12mVrms
1kHz
0°
0
0
Fig 3c.CB Ampl

Figure 9

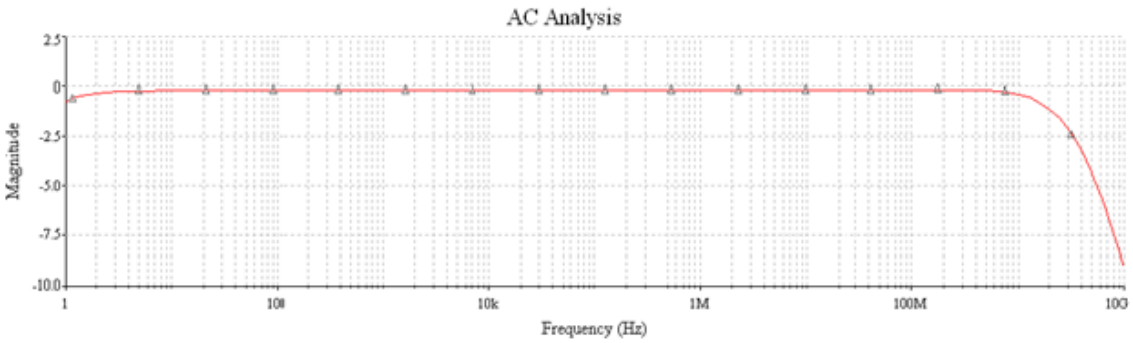

Figure 4. Gain Magnitude Plot in dB of CC Amplifier.
y-axis: Gain Magnitude in dB; x-axis: Frequency plot on logrithmic scale.

Figure 10

Common Collector Circuit Schematics is given in Figure 4c. The Gain Magnitude Plot and Gain Phase plot are given in Figure 4 and 4b.

By inspecting Figure 1 we find a Band-width of 4GHz. The midband gain is 0dB and -3dB frequencies are (less than 1Hz) and 4GHz.

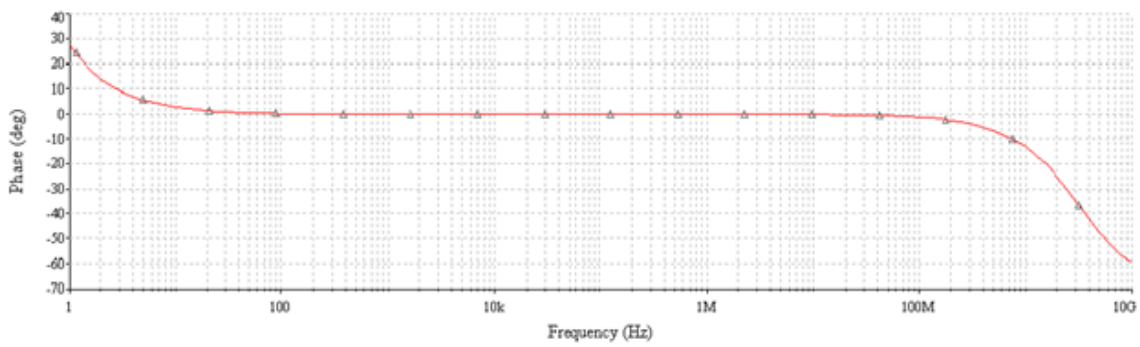

Figure 4.b. Phase of Gain of CC Amplifier vs Frequency.
y-axis: Phase of Gain in degrees; x-axis: Frequency Plot on logrithmic scale.

Figure 11

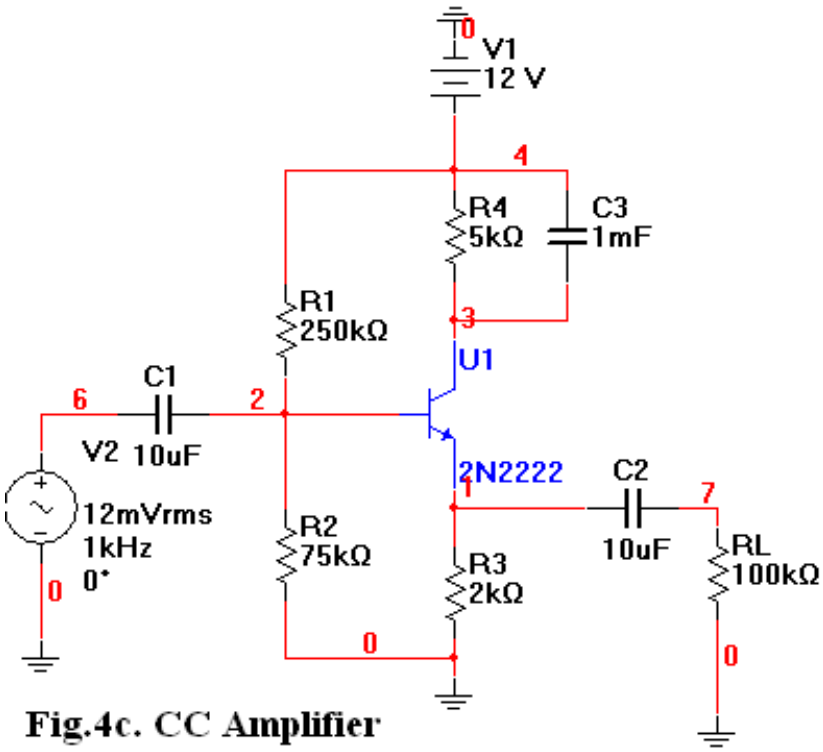
0
V1
12 V
4
R4
5kΩ
C3
1mF
R1
250kΩ
3
U1
C1
6
2
V2
10uF
2N2222
C2
7
12mVrms
1kHz
0°
R2
75kΩ
R3
2kΩ
10uF
RL
100kΩ
0
0
0
Fig.4c. CC Amplifier

Figure 12